Portugal Cove
St. Philip's

INVITATION TO TENDER
For

Installation of Heat Pump – Depot

In

PORTUGAL COVE-ST. PHILIP'S

September 2022

Tender Opening: October 13, 2022, 2:30 PM N.S.T
Tender Closing: October 13, 2022, 2:30 PM N.S.T

This Page is Intentionally Left Blank

SUMMARY OF KEY INFORMATION

INVITATION TO TENDER TITLE	Installation of Heat Pump - Depot Proponents should use this title on all correspondence.
CONTACT PERSON	The point of contact for this tender is: *Charlie Hamlyn* *Director of Public Works* *Town of Portugal Cove-St. Philip's* *Email: Procurement@pcsp.ca* *Phone: 709-895-8000 ext. 232*
ENQUIRIES	Please direct all enquiries by email to the Contact Person. Enquiries received by any other means may not be answered. Proponents are encouraged to submit enquiries at an early date to permit consideration by the Owner. Enquiries should be submitted no later than 2:30 pm on the day that is five (5) business days before the Submission Time. The Owner may, in its sole and absolute discretion, decide to not respond to any enquiry.
SUBMISSION TIME	Submission time is 2:30 pm Newfoundland Time, Thursday October 13, 2022, or as indicated in the call for bids, or amended by addendum.
SUBMISSION LOCATION	Tenders are to be submitted to: Director of Public Works Town of Portugal Cove-St. Philip's 1119 Thorburn Road Portugal Cove-St. Philip's, NL A1M 1T6 Or Via email to: procurement@pcsp.ca

TABLE OF CONTENTS

1.0 INSTRUCTION TO BIDDERS 5
2.0 Access to Information 9
3.0 Reservation of Rights 9
4.0 CONFLICT OF INTEREST AND RELATIONSHIP DISCLOSURE 10
5.0 No Collusion 11
6.0 Limitation of Damages 11
7.0 TENDER BID FORM 12
8.0 LIST OF SUB-CONTRACTORS 12
Appendix A – Project Background, Description and Reporting Details i
1.0 Background i
2.0 Project Description i
3.0 Project Timeline i
4.0 Reporting Structure i
5.0 Enquiries ii
Appendix B – Project Objectives and Scope of Work i
1.0 Summary: i
2.0 Scope of Work: i
4.0 Tender Price Table ii
Additional Notes iii
Appendix C: CERTIFICATE OF INSURANCE i
APPENDIX D – Project Reference and Personnel Reference Templates i
APPENDIX E: ENGINEERING DRAWINGS i

1.0 INSTRUCTION TO BIDDERS

1. TENDERS

   a. Envelopes containing the Tender are to be clearly marked and forwarded to the Owner at the below address:

      Tender for
      Town of Portugal Cove-St. Philip's
      1119 Thorburn Road Portugal Cove-St. Philip's, NL
      Attn: Charlie Hamlyn, Director of Public Works
      PCSP-PW-2022-08 Upgrade Depot Heating System

      The name and address of the Bidder and the closing time must be shown on the envelope.

   b. Tenders must be received at the above address on or before the exact closing time, (2:30 p.m. NST) and date (October 13, 2022) indicated in the advertisement. TENDERS RECEIVED AFTER THAT TIME WILL NOT BE CONSIDERED.

   c. The Form of Agreement is included in the Contract Documents at the time of tendering for the purpose of information to Bidders and shall not be completed at the time of tendering.

   d. Before submitting a tender, tenderers shall carefully examine the Contract Documents and the site of the proposed work and fully inform themselves of the existing conditions and limitations. No subsequent allowance under the Contract Documents will be considered for any Bidder who had failed to become familiar with all aspects of the work.

   e. The Town will not defray any expenses incurred by the tenderers in the preparation and submission of their tenders.

   f. Due to time constraints with approved funding, the Town reserves the right to award tender to bidder whom can perform the work in the required timeline, as outlined by the funding received.

2. TENDER DOCUMENTS

   a. The Tender Documents consist of the Instructions to Bidders, Tender Bid Form, Form of Agreement and any Amendments to the Contract Documents issued during the tender period.

   b. Every interpretation of or addition to the Contract Documents to be considered a valid part of the Contract Documents will be issued in the form of a written addendum.

3. TENDER SURETY AND BONDING

a. Bidding Security

Every tenderer shall submit with their Tender a bid bond issued by an approved Surety Company licensed to do business in the Province of Newfoundland and made out in favor of the Town of Portugal Cove-St. Philip's.

The bid bond shall be at least ten percent (10%) of the tendered amount. No bidding security will be required for a tendered amount of less than $25,000 unless specifically called for elsewhere in the tender document. An approved certified cheque may be substituted in lieu of the bid bond. The bidding security will be returned upon receipt of the Performance and Labour and Materials Bonds.

The terms of the bid security will be invoked, and the amount retained by the Owner, if the Bidder fails to enter into an agreement when notified of the award of the work within the tender validity period; or fails to provide the required insurance and commence work within fourteen (14) days; or fails to provide the Performance and Labour and Materials Bonds in the amount and within the period specified.

b. Performance Bond

A Performance Bond will be required in the amount of fifty percent (50%) of the contract price. The Performance Security is to be received not later than two (2) weeks after the award of the contract by the letter of intent and prior to the formal execution of the agreement. No work is to be undertaken until the Performance Security has been received. Performance Security will not be required for a contract value of less than $25,000.

In lieu of the Performance Bond, the Town may accept at its sole discretion an approved certified cheque for ten percent (10%) of the tendered amount. The cheque will be retained until satisfactory completion of the work including the guarantee period, after which this amount will be returned to the Contractor together with the accrued interest thereon at the current bank rate.

c. Labour and Materials Payment Bond

A Labour and Materials Payment Bond will be required in the amount of fifty percent (50%) of the contract price. The Labour and Materials Payment Bond is to be received not later than two (2) weeks after the award of the contract by the letter of intent and prior to the execution of the formal agreement. No work is to be undertaken until the Labour and Materials security has been received. Labour and Materials security will not be required for a contract valued at less than $25,000. For contracts under $50,000 only, In lieu of the Labour and Materials Bond, the Town may accept at its sole discretion an approved certified cheque of ten percent (10%) of the tendered amount. The cheque will be retained until substantial completion of the work as defined by the Mechanics Lien Act and upon receipt of a completed and approved Statutory Declaration Form. This security, if in the form of a cheque, will be returned to the Contractor together with the accrued interest thereon at the current bank rate.

4. COMPLETION OF TENDER FORM

   a. The Tender Form is to be completed in its entirety and submitted in the envelopes provided and the name of the Tenderer entered in the “Name of Bidder” space on the tender envelope. The Tenderer should retain a copy of the tender for its records.

   b. Type or legibly print the information required on the Tender Form.
   c. Type or legibly print the Tenderer's full business name and address in the spaces provided on the Tender Form.
   d. Sign the Tender Form in the space provided as indicated:

      In the case of a Sole Proprietorship, the Sole Proprietor will sign where indicated in the presence of a witness who will also sign where indicated. Insert the words “Sole Proprietor” next to the signature.

      In the case of a Partnership, all partners will sign where indicated in the presence of a witness who will also sign where indicated. Insert the word “Partner” next to signatures.

      In the case of a Limited Company, authorized signing officers in the presence of a witness who will also sign where indicated, and the corporate seal will be affixed. Indicate next to signature the corporate title of each signer.

   e. Spaces or Appendices will be provided with the Tender Form if required for a list of sub-contractors, use of bid depository, contractor's experience, and list of equipment. All such spaces and appendices must be completed in their entirety legibly by typewriter or by printing in ink.

   f. If it becomes necessary to correct an error made on the Tender Form, such correction must be initialed and dated by the person or persons signing the Tender Form.

   g. Failure to acknowledge receipt of addenda shall be considered an incomplete tender.

5. UNACCEPTABLE TENDERS

   a. Tenders not submitted on the Tender Form provided will not be considered.

   b. Faxed tenders will not be accepted.

   c. Tenders received after the Tender closing time will not be considered.

   d. Incomplete Tenders will be rejected.

   e. Tenders not accompanied by an approved security in the correct amount will be rejected.

   f. Tenders containing qualification or additional clauses to the Tender Form will be rejected.

g. Incorrectly prepared tenders may be rejected.

h. For unit prices in a Stipulated Contract and under a Unit Price Contract, bidders are required to enter a unit price for each and every item bid; this includes lump sum bid items. If any unit price or lump sum price as a unit is omitted by the bidder, then the bid shall be considered incomplete and automatically rejected.

6. AMENDMENTS TO TENDER

Properly documented amendments to the Tender will be permitted up to the Tender closing time. Amendments must be submitted either via courier or in-person and be contained in a sealed envelope marked AMENDMENT – PCSP-PW-2022-08 Upgrade Depot Heating System. It is the responsibility of the bidder to ensure receipt of amendment by the Town.

7. WITHDRAWAL OF TENDERS AND AMENDMENTS

Bids may be withdrawn without penalty by courier or email (procurement@pcsp.ca) request if received prior to the time fixed for the opening. It is the responsibility of the bidder to ensure receipt by courier, fax or in person, by the Town.

8. SUBSTITUTION OF MATERIALS

Tenders shall be based upon using the materials or products as specified without substitution. Where two or more brand names are specified, the choice shall be left to the Contractor. Where only one brand name is stated there shall be no substitution.

9. USE OF BID DEPOSITORY

The attention of the Bidder is drawn to the fact that the Bid Depository of the Newfoundland and Labrador Construction Association will be used for the Trade as listed in Appendix N/A.

10. ACCEPTANCE OF TENDER

a. The Town will not necessarily accept the lowest price nor any tender and reserves the right to cancel this solicitation at any time.

b. The Town reserves the right to remove a portion of the work identified within from the work to be completed.

c. Upon written acceptance of the tender within the tender validity period, the Tender Form becomes part of the Contract Documents, and the successful tenderer becomes the Contractor. The Contractor will be required to execute a formal agreement with the Owner within fourteen (14) days of the date of the letter of intent.

11. CERTIFICATE OF RECOGNITION

The contractor and subcontractors shall within 14 calendar days of award of the contract, and prior to commencement of the work, provide a Letter of Good Standing under the Certificate of Recognition Program from the Newfoundland and Labrador Construction Safety Association.

12. PERIOD OF WORK
    a. Unless otherwise specified or approved by the Town, the contractor shall be mobilized and on the work site within 14 calendar days after execution of a signed contract agreement.

    b. No work is to commence before the date of the formal agreement.

2.0 ACCESS TO INFORMATION

1. This procurement process is subject to the Access to Information and Protection of Privacy Act, 2015.
2. The financial value of a contract resulting from this procurement process will be publicly released as part of the award notification process.
3. **The bidder agrees that any specific information in its bid that may qualify for an exemption from disclosure under subsection 39(1) of the Access to Information and Protection of Privacy Act, 2015 has been identified. If no specific information has been identified it is assumed that, in the opinion of the bidder, there is no specific information that qualifies for an exemption under subsection 39(1) of the Access to Information and Protection of Privacy Act, 2015.**
4. By submitting a Tender, the Proponent represents and warrants to the Owner that the Proponent has complied with applicable Laws, including by obtaining from each person any required consents and authorizations to the collection of information relating to such individual and to the submission of such information to the Owner, and the use, distribution and disclosure of such information as part of the Tender for the purposes of, or in connection with, this INVITATION TO TENDER and the Competitive Selection Process.
5. For further clarification on Access to Information and Protection of Privacy disclosure requirements for Public Procurement, see the guidance document from the Office of the Information and Privacy Commissioner at the following link: http://www.oipc.nl.ca/pdfs/PublicProcurementActAndATIPPA2015.pdf

3.0 RESERVATION OF RIGHTS

The Owner reserves the right, in its sole and absolute discretion, to:

1. Amend the scope of work of the tender, and/or modify, cancel, or suspend the tender at any time for any reason.
2. Accept or reject any tender based on the evaluation of the tender based on the guidelines in this Terms of Reference. In particular, the Owner is not obliged to select the proponent with the lowest cost.
3. Reject a tender that fails to meet the Mandatory Requirements.
4. Waive a defect, irregularity, non-conformity, or non-compliance in or with respect to a tender or failure to comply with the requirements of this tender, except for Mandatory Requirements, and accept that tender even if such a defect, irregularity, non-conformity or non-compliance or

failure to comply with the requirements of this invitation to tender would otherwise render the tender null and void.

5. Reject, disqualify, or not accept any or all tender without any obligation, compensation, or reimbursement to any Proponent or any of its team members.
6. Re-advertise for new tenders to this or a modified invitation to tender, call for quotes, proposals, or tenders, or enter into negotiations for this work or for work of a similar nature.
7. Make any changes to the terms or the business opportunity described in this invitation to tender.
8. Amend, from time to time, any date, time period or deadline provided in this invitation to tender, upon written notice to all Proponents.

4.0 CONFLICT OF INTEREST AND RELATIONSHIP DISCLOSURE

1. Reservation of Rights to Disqualify
   a. The Owner reserves the right to disqualify any Proponent that in the Owner's opinion has a conflict of interest or an unfair advantage (including access to any confidential information not available to all Proponents), whether real, perceived, existing now or likely to arise in the future, or may permit the Proponent to continue and impose such conditions as the Owner may consider to be in the public interest or otherwise required by the Owner.

2. Relationship and Conflict Disclosure
   a. Each Proponent, including each member of the Proponent team, shall fully disclose all relationships it may have with the Owner, or any other person providing advice or Works to the Owner with respect to the Work or any other matter that gives rise, or might give rise, to a conflict of interest or an unfair advantage at any time during the invitation to tender Process by written notice addressed to the Contact Person promptly after becoming aware of any such relationship.
   b. At the time of such disclosure, the Proponent will include sufficient information and documentation to demonstrate that appropriate measures have been, or will be, implemented to mitigate, minimize, or eliminate the actual, perceived, or potential conflict of interest or unfair advantage, as applicable. The Proponent will provide such additional information and documentation and implement such additional measures as the Owner may require in its sole and absolute discretion in connection with the consideration of the disclosed relationship and proposed measures.

3. The Owner May Make Advance Decisions
   a. The Owner may make advance decisions, where the Owner identifies a potential conflict or an unfair advantage. The onus is on the Proponent to clear any potential conflict or unfair advantage, or to establish any conditions for continued participation.

4. Decisions Final and Binding
   a. The decision of the Owner is final and binding on the persons requesting the ruling and all other parties including Proponents and Proponent team members. The Owner has discretion to establish the relevant processes from time to time, including any circumstances in which a decision may be amended or supplemented.
   b. The Owner may provide any decision by the Owner regarding conflicts of interest to all Proponents if the Owner, in its sole and absolute discretion, determines that the decision is of general application.

5.0 NO COLLUSION

1. Proponents and Proponent team members, their employees and representatives involved with their tender will not discuss or communicate, directly or indirectly, with any other Proponent or any director, officer, employee, consultant, advisor, agent, or representative of any other Proponent (including any Proponent team member of such other Proponent) regarding the preparation, content or representation of their tenders. For subcontractors that are partnering or considering partnering with more than one Proponent, such subcontractors shall keep all pricing, strategy or other commercially confidential information discussed with one Proponent confidential in their discussion with another Proponent.
2. By submitting a tender, a Proponent, on its own behalf and as authorized agent of each firm, corporation or individual member of the Proponent and Proponent team, represents and confirms to the Owner, with the knowledge and intention that the Owner may rely on such representation and confirmation, that its tender has been prepared without collusion or fraud, and in fair competition with tenders from other Proponents.
3. In the event of any collusion in contravention of this Section, the Owner in its sole and absolute discretion may at any time, but will not be required to, reject all tenders submitted by that Proponent without further consideration or compensation.

6.0 LIMITATION OF DAMAGES

Each Proponent on its own behalf and on behalf of the Proponent team and any member of a Proponent team:

1. Agrees not to bring any claim against the Owner or any of its respective employees, advisors or representatives for damages in excess of the amount equivalent to the reasonable costs incurred by the Proponent in preparing its tender for any matter in respect of this INVITATION TO TENDER, including:
   a. If the Owner accepts a non-compliant tender or otherwise breaches, or fundamentally breaches, the terms of this INVITATION TO TENDER; or
   b. If the Work or INVITATION TO TENDER process is modified, suspended or cancelled for any reason (including modification of the scope of the Work or modification of this INVITATION TO TENDER or both) or the Owner exercises any rights under this INVITATION TO TENDER; and

2. Waives any and all claims against the Owner, or any of their respective employees, advisors or representatives for loss of anticipated profits or loss of opportunity if no agreement is made between the Owner and the Proponent for any reason, including:
   a. If the Owner accepts a non-compliant tender or otherwise breaches or fundamentally breaches the terms of this INVITATION TO TENDER or the INVITATION TO TENDER Process; or
   b. If the Work or INVITATION TO TENDER Process is modified, suspended or cancelled for any reason (including modification of the scope of the Work or modification of this INVITATION TO TENDER or both) or the Owner exercises any rights under this INVITATION TO TENDER.

7.0 TENDER BID FORM

Tender for: **Town of Portugal Cove-St. Philip's**
1119 Thorburn Road
Portugal Cove-St. Philip's, NL
Attn: Charlie Hamlyn, Director of Public Works
PCSP-PW-2022-08 Upgrade Depot Heating System

a. Having carefully examined the site of the proposed work and all conditions affecting such, as well as the Contract Documents including the Description of Work, Instructions to Bidders, all Addenda, as well as any other documents included as part of the Tender package for this project

   WE, THE UNDERSIGNED, hereby offer to furnish all necessary labour, materials, superintendence, plant, tools and equipment, and everything else required to perform expeditiously and complete in a satisfactory manner the work as outlined in Appendix E: Engineering Drawings for the sum of:

   _____

   ($)
   _____

   In lawful money of Canada which includes all prime costs, allowances and Government sales or excise taxes, including HST, in force at this date, except as otherwise provided in the tendering documents.

b. The work will be substantially performed by the date agreed upon during kick-off meeting.

c. WE ENCLOSE HEREWITH if required by the Instructions to Bidders

   i. A Bid Bond in an acceptable form and correct amount issued by a company licensed to carry on such a business in the Province of Newfoundland and Labrador or,
   ii. A certified cheque in the correct amount.

   In the event of this tender being accepted within the time stated in Section (d) below and our failure to enter into a contract in the form hereinafter mentioned for the amount of our tender the said security may at the option of the Owner be forfeited. The forfeiting of the security does not limit the right of action of the Owner against us for our failure or refusal to enter into a contract.

d. IF NOTIFIED IN WRITING BY THE OWNER OF THE ACCEPTANCE OF THIS TENDER WITHIN 14 DAYS OF THE TENDER CLOSING DATE SUBJECT TO SUCH OTHER PERIOD AS MAY BE SPECIFIED IN THE TENDERING DOCUMENTS, WE WILL:

   i. Execute the Form of Agreement;

   ii. If specified, furnish the security for the proper completion of the work, the said security, if in the form of bonds, to be issued on an acceptable form;

   iii. Complete substantially all the work included in the contract within the time and under conditions specified.

e. WE understand that Performance Bond, Labour and Materials Bond and Insurance as required by the Contract Documents must be provided and in force prior to the commencement of any work and satisfactory proof of such be provided to the Owner.

f. WE declare that the rates and prices variously set forth in the Tender Price Table (Appendix B) have been correctly computed for the purposes of this Tender and that they include and cover all contingencies and provisional sums and all duties, taxes and handling charges and all transportation and all other charges.

g. WE confirm that the sums herein tendered include all sales taxes, royalties, custom duties, foreign exchange charges, transportation, travelling costs, all overhead and profit, all coordination fees, insurance premiums and all other charges.

h. WE understand and agree to list the name of sub-contractors and suppliers whose bids have been used in the preparation of this tender price on the List of Sub-Contractors Form. The list will be subject to the approval of the Owner. “By own forces” will be considered valid and satisfactory only if the tenderer is recognized by the Newfoundland and Labrador Construction Association or by the Road Builders Association as being a “bona fide” contractor or supplier of that particular trade or item.

   WE agree to authorize the Owner to release the names of subcontractors used in our tender where such information is requested from the Owner.

   WE reserve to us the right to substitute other sub-contractors for any trades in the event of any sub-contractor becoming bankrupt after the date hereof. Any such substitutions shall be subject to the approval of the Owner and contingent upon satisfactory evidence of bankruptcy.

i. WE understand and agree that the Owner may order changes to the work in the form of additions or deletions in accordance with the General Conditions, Supplementary General Conditions and the intent of the contract documents.

j. WE here acknowledge receipt of the following addenda, if applicable:

Addendum No(s).	

k. In order for a Tender to be valid, it must be signed by duly authorized officials as indicated in the Instructions to Bidders.

SIGNATURE OF TENDERER

Firm Name:_____

Address: _____

_____

Postal Code:_____Email: _____

Telephone:_____Fax #: _____

_____
Signing Officer

_____
Signing Officer

_____
Witnessed By

_____
Date:

Corporate Seal

8.0 LIST OF SUB-CONTRACTORS

The list of sub-contractors and/or manufacturers and/or suppliers that shall be employed on this project for each part of the work identified in the table below must be completed by the bidder. The use of these sub-contractors and/or manufacturers and/or suppliers is subject to the approval of the Owner. If the work identified below is to be done by own forces indicate by filling in "By own forces" in the Company Name column.

This form was completed and submitted by:

Name:	
Address:	
Date:	

This form is an integral part of the Tender and shall be submitted as part of the Tender bid if sub- contractors are to be used.

Work	Category: Sub-contractor or Manufacturer or Supplier	Company Name	Address

For each category identified in the table above, work experience references may be required by the Owner.

.

APPENDIX A – PROJECT BACKGROUND, DESCRIPTION AND REPORTING DETAILS

1.0 BACKGROUND

The Town of Portugal Cove-St. Philip's is a municipality in the greater St. John's metropolitan area, in the Province of Newfoundland and Labrador. The land area of the Town consists of approximately 5,970 ha (59.7 sq. kilometers). Data from Statistics Canada identified that the Town's population had grown approximately 10.6% between 2011 and 2016; from 7,366 local residents in 2011 to 8,147 local residents in 2016.

A goal of the Town is to transition from the use of fossil fuels to provide heating to the Depot facility, to the use of cleaner electrical resources. This is transition helps the Town cut down on its carbon footprint and aids in combatting climate change.

2.0 PROJECT DESCRIPTION

The Town has been supplied with a grant from the Climate Change Challenge Fund (CCCF) to upgrade the existing oil furnace heating system, for the Towns Depot facility, with a new electrical heat pump. The electrical conversion project will consist of the installation of a new heat pump, coupled with the decommissioning and removal of the older, fossil fueled, oil furnace system.

3.0 PROJECT TIMELINE

It is the goal of the Owner to have the project beginning once all required components are available due to supply chain issues , with a substantial completion date to be determined during kick-off meeting.

4.0 REPORTING STRUCTURE

The successful Proponent will report directly to:

Charlie Hamlyn
Director of Public Works
Town of Portugal Cove-St. Philip's
Email: Charlie.hamlyn@pcsp.ca
Phone: 709-895-8000 ext. 232

The successful Proponent shall maintain a communication structure that includes the Owner and other significant stakeholders.

5.0 ENQUIRIES

All enquiries regarding this tender must be directed to:

Charlie Hamlyn
Director of Public Works
Town of Portugal Cove-St. Philip's
Email: Charlie.hamlyn@pcsp.ca
Phone: 709-895-8000 ext. 232

All questions should be submitted, in writing at least ten (10) days prior to the closing time and date. No amendments will be issued five (5) days prior to closing. Any verbal representations, promises, statements or advice made by employees of the Owner other than written responses, should not be relied upon.

APPENDIX B – PROJECT OBJECTIVES AND SCOPE OF WORK

1.0 SUMMARY:

Work under this contract includes the installation of an electronic heat pump at the Towns Depot facility located at 1119 Thorburn Road, with access off Rainbow Gully Road. Also under this contract, work will include the required electrical connections, provision of new service for electrical if required, decommissioning and removal of oil furnace and oil tank, new heating duct work, if existing is not compatible.

2.0 SCOPE OF WORK:

1. General Information

1. The scope of work includes installation of a new heat pump for the Towns Depot facility. This includes all necessary electrical, plumbing and mechanical work; as well as the decommissioning and removal of the existing oil furnace and oil tank. The new heat pump will need to be protected from the elements, and capable of providing heat to 4775 square feet. Any elements of the existing system deemed incompatible for the new heat pump system (i.e.. Duct work, electrical, plumbing, mechanical, etc..) must be removed upon decommissioning of the existing oil furnace system. The electrical and mechanical engineering drawings can be found in Appendix E.

2. All work must be in compliance with current OHS policies and requirements from the federal and provincial governments, including but not limited to the Occupational Health and Safety Act & Regulations. In accordance with this, ensure to contact NL Power, and the Town for locates of any underground services that may be in the area, to prevent damage.

3. A site visit prior to completion of tender is a mandatory requirement. This meeting must take place during Monday-Friday between 8:30am – 4:30pm and include a representative from the Town. The Director of Public Works must be contacted to arrange time and date of site visit. This meeting is to determine the ability to use the current heating duct work, the electrical service required and gather any other pertinent information required.

4. The Proponent warrants and guarantees that the Work is free from all defects arising from faulty design or application in any part of the Work that has been provided by the Proponent. The Proponent warrants and guarantees that the Work is free from all defects arising from faulty construction, manufacture, installation, materials or workmanship which appear within twelve (12) months from the date of accepted completion of the Work or such other period specified in the contract documents.

5. The proponent will ensure that all warranties received from product manufacturers are transferred to the Town.

6. A kick-off meeting is required with Town Public Works Management prior to the start of construction, no later than October 21, 2022.

4.0 TENDER PRICE TABLE

Tender Item Description	Quantity	Amount
HEAT PUMP INSTALLATION ▪ New Heat Pump - Must be capable of heating 4775 sq. ft. ▪ Heating duct work if required. (To be determined upon site visit) -Removal and disposal of existing duct work if not compatible ▪ Plumbing material for heat pump and labour ▪ Mechanical labour ▪ Attached in Appendix E are the Mechanical Drawings completed in 2016.		
ELECTRICAL SERVICE ▪ Electrical Service - Service demand for heat pump - Determination of voltage from existing service ▪ Installation of new service if required ▪ Attached in Appendix E are the Electrical Drawings completed in 2016.		
DEMOLITION ▪ Removal and disposal of Patriot 80 Plus Furnace ▪ Removal and disposal of Above Ground Steel Horizontal Oil Tank - 1270mm Diameter & 2273L Capacity - Including disposal of furnace oil currently in tank ▪ Removal and disposal of any old/obsolete electrical, plumbing, and mechanical components		

Notes:

1. For the purposes of the Public Tender Act and the evaluation of tenders received, the bid shall be the Total Tender Amount.

2. Costs associated with the construction and the final contract amount will be adjusted accordingly, upwards, or downwards, based upon the quoted price.

3. Work to begin once all required parts for heat pump system have been obtained.

4. If possible, removal and decommissioning of oil furnace/tank to occur after the

installation of new heat pump, to decrease operating time without heat for facility.

ADDITIONAL NOTES

Due to COVID – 19 the Town has changed some of the operating practices to ensure safety of staff and public. During this time electronic submissions & hard copy (mailed) will be accepted for this process, as well as a digital opening (https://us02web.zoom.us/j/6780001119). Upon awarding of the contract, the proponent will have to ensure that the public health guidelines on COVID-19 are meet for work completion.

We know this is a challenging time and we thank you for your co-operation and understanding.

Provincial Supplier Allowance
In the evaluation of submissions, the Town must apply a ten per cent (10%) reduction to the bid price of a provincial supplier prior to the evaluation based on the thresholds for the Canadian Free Trade Agreement (CFTA). The 10% reduction only needs to be applied when the evaluation includes suppliers that are not provincial suppliers.
The submission with the lowest price, following the application of the provincial supplier reduction allowance if required, and that meets all the requirements will ultimately be determined to be the preferred supplier and be awarded a contract if an award is made.

ATIPPA
The financial value of a contract resulting from this procurement process will be publicly released as part of the award notification process. This procurement process is subject to the Access to Information and Protection of Privacy Act, 2015. The bidder agrees that any specific information in its bid that may qualify for an exemption from disclosure under subsection 39(1) of the Access to Information and Protection of Privacy Act, 2015 has been identified. If no specific information has been identified it is assumed that, in the opinion of the bidder, there is no specific information that qualifies for an exemption under subsection 39(1) of the Access to Information and Protection of Privacy Act, 2015.

Project Team & Experience
Each bid must contain one (1) completed project of a similar scope. This project should clearly identify the following, which can be found in a Project Reference Form in Appendix D.

- Project Location
- Client
- Client Reference
- Project Type
- Services
- Duration (start and finish dates)
- Approved Funding
- Final Project Cost
- Key Proponent Roles
- Key Project Staff Role

Along with the Project Reference Form, the Key Personnel Form must also be completed for each key member associated with installation of the electronic scoreboard.

Project management practices shall be in accordance with well-established practice and standards, accepted and recognized by project management associations and the industry.

APPENDIX C: CERTIFICATE OF INSURANCE

THIS CERTIFICATE OF INSURANCE SHOULD BE DELIVERED TO CONSULTANT, THE DEPARTMENT, AND/OR THE OWNER WITHIN 30 DAYS OF THE AWARD OF THE CONTRACT AND BEFORE CONSTRUCTION BEGINS.

DESCRIPTION & LOCATION OF WORK		
PROJECT NO.	AWARD DATE	VALUE $

INSURER	Name:
	Address:
BROKER	Name:
	Address:
INSURED	Name:
	Address:
ADDITIONAL INSURED	___ HER MAJESTY THE QUEEN IN RIGHT OF NEWFOUNDLAND AND LABRADOR AS REPRESENTED BY THE MINISTER OF MUNICIPAL AFFAIRS
	___THE OWNER
	___ARCHITECTURAL AND ENGINEERING CONSULTANTS OF THE OWNER (EXCLUDING PROFESSIONAL LIABILITIES)

THIS DOCUMENT CERTIFIES THAT THE FOLLOWING POLICIES OF INSURANCE AND INDICATED COVERAGE ARE AT PRESENT IN FORCE SUBJECT TO THE TERMS, CONDITIONS AND EXCLUSIONS AS CONTAINED THEREIN COVERING THE OPERATIONS OF THE INSURED IN CONNECTION WITH THE ABOVE NOTED CONTRACT MADE BETWEEN THE NAMED INSURED AND THE OWNER.

POLICY TYPE	NUMBER	INCEPTION DATE	EXPIRY DATE Y/M/D	LIMITS OF LIABILITY
1.1 COMMERCIAL GENERAL LIABILITY 1.2 WRAP-UP LIABILITY INCLUDING WHERE INDICATED: A. BLASTING B. PILE DRIVING OR CAISSON WORK C. REMOVAL OR WEAKENING OF SUPPORT	1.1 1.2 A (Y/N) B (Y/N) C (Y/N)	1.1 1.2_____	1.1 1.2_____	MINIMUM $2,000,000.00
2A. BUILDERS' RISK "BROAD FORM" OR 2B. INSTALLATION FLOATER "BROAD FORM" OR 2C. PIERS, WHARVES, & DOCKS RIDER COVERAGE MAINTAINED UNTIL ARCHITECT/ENGINEER ISSUES CERTIFICATE OF SUBSTANTIAL PERFORMANCE	2A_____ OR 2B_____ OR 2C _____ (Y/N) _____	2A_____ 2B_____ 2C_____	2A_____ 2B_____ 2C_____	100% OF THE VALUE OF WORK COVERED
3. AUTOMOBILE LIABILITY INSURANCE				MINIMUM $2,000,000.00
4. AIRCRAFT AND/OR WATERCRAFT WATERCRAFT LIABILITY (IF APPLICABLE)				MINIMUM $2,000,000.00
5.				

"THE INSURER AGREES TO NOTIFY THE NAMED INSURED, HER MAJESTY AND/OR THE OWNER, IN WRITING, THIRTY (30) DAYS PRIOR TO CANCELLATION OR MATERIAL CHANGE OF ANY POLICY EXCEPT IN THE EVENT OF NON-PAYMENT WHERE POLICY CONDITIONS DEALING WITH TERMINATION WILL APPLY."

NAME OF INSURER'S OFFICER OR AUTHORIZED REPRESENTATIV:	SIGNATURE:	DATE:
		TELEPHONE NO.:

ISSUANCE OF THIS CERTIFICATE SHALL NOT LIMIT OR RESTRICT THE RIGHT OF THE OWNER TO REQUEST, AT ANY TIME, DUPLICATE CERTIFIED COPIES OF SAID INSURANCE POLICIES

APPENDIX D – PROJECT REFERENCE AND PERSONNEL REFERENCE TEMPLATES

PROJECT REFERENCE FORM

Project Location	**Project Description**
Client	
Client Reference	
Project Type	
Services	**Role of Proponent**
Duration Start Date: End Date:	
Approved Funding	
Final Project Cost	**Challenges**
Key Proponent Roles	
Key Project Staff Role	

KEY PERSONNEL FORM

Insert photo if applicable	**Role for Proposed Project**
Name	**Reference Project Role**
Title	Reference Project 1:
Experience	
Contact	

APPENDIX E: ENGINEERING DRAWINGS

KEY–NOTES:

1. EXISTING MAIN ELECTRICAL PANEL 'A' (FEDERAL PIONEER CAT# NBLP, 22kAICS). REMOVE TWO (2) – 15A/1P CIRCUIT BREAKERS AND SUPPLY AND INSTALL ONE (1) – 60A/2P CIRCUIT BREAKER TO SUPPLY NEW PANEL 'B'. RE–ROUTE THE DISCONNECTED LOADS TO THE NEW PANEL 'B'. SUPPLY AND INSTALL 3 – #6 RW90 + 1 – #8 TW GND IN 27mm EMT CONDUIT TO PANEL 'B'.
2. EXISTING 60A GENERATOR PANEL LOADCENTRE (SQUARE D QO SERIES, CQOC36UC, c/w CONNECTION TO AN EXTERIOR RECEPTACLE.
3. CEILING MOUNTED DUPLEX RECEPTACLE, CSA 5–15R, FOR HRV–2. COORDINATE EXACT REQUIREMENTS AND LOCATION ON–SITE WITH MECHANICAL.
4. NEW MAGNETIC MOTOR STARTER FOR EXHAUST FAN EF–1. STARTER TO BE 'CUTLER–HAMMER' AE–16 SERIES OR APPROVED EQUAL. STARTER TO BE IN NEMA TYPE 12 ENCLOSURE, STARTER TO BE NEMA SIZE 0, 240V, 3P RATED. STARTER TO BE c/w CONTROL TRANSFORMER, OVERLOADS AND HEATER ELEMENTS TO SUIT, 2–N.O. & 2 N.C. AUXILIARY CONTACTS, ON–AUTO SELECTOR SWITCH WITH RUN PILOT LIGHT. MOUNTED 1500mm A.F.F. COORDINATE EXACT LOCATION WITH MECHANICAL CONTRACTOR PRIOR TO ROUGH IN. REFER TO MECHANICAL DRAWINGS FOR ALL INTERCONNECTIONS. SEE MECHANICAL DETAIL 6 DRAWING M–4.
5. POWER CONNECTION TO SOURCE CAPTURE EXHAUST CONTROL PANEL 'CP'. SEE MECHANICAL DETAIL 6 DRAWING M–4. COORDINATE EXACT REQUIREMENTS AND LOCATION ON–SITE WITH MECHANICAL. SEPARATE PRICE #1.
6. POWER CONNECTION TO MOTORIZED DAMPER, MD–1. SUPPLY AND INSTALL WIRING TO ALL MOTORIZED DAMPERS AS REQUIRED BY MECHANICAL DIVISION.
7. SUPPLY AND INSTALL NEW 15A/1P CIRCUIT BREAKER FOR GAS DETECTION PANEL(S).
8. 120V POWER CONNECTION TO GAS DETECTION PANEL(S) FROM GENERATOR PANEL LOADCENTRE, CIRCUIT #17. COORDINATE EXACT REQUIREMENTS AND LOCATION ON–SITE WITH MECHANICAL.
9. POWER CONNECTION TO EXHAUST FAN, EF–1. 2HP, 240V, 1ø, CONNECT TO NEW MAGNETIC MOTOR STARTER, KEY–NOTE 4.
10. POWER CONNECTION TO SOURCE CAPTURE EXHAUST FAN, EF–2. 3HP, 240V, 1ø, FROM CONTROL PANEL 'CP', KEY–NOTE 5. SEPARATE PRICE #1.

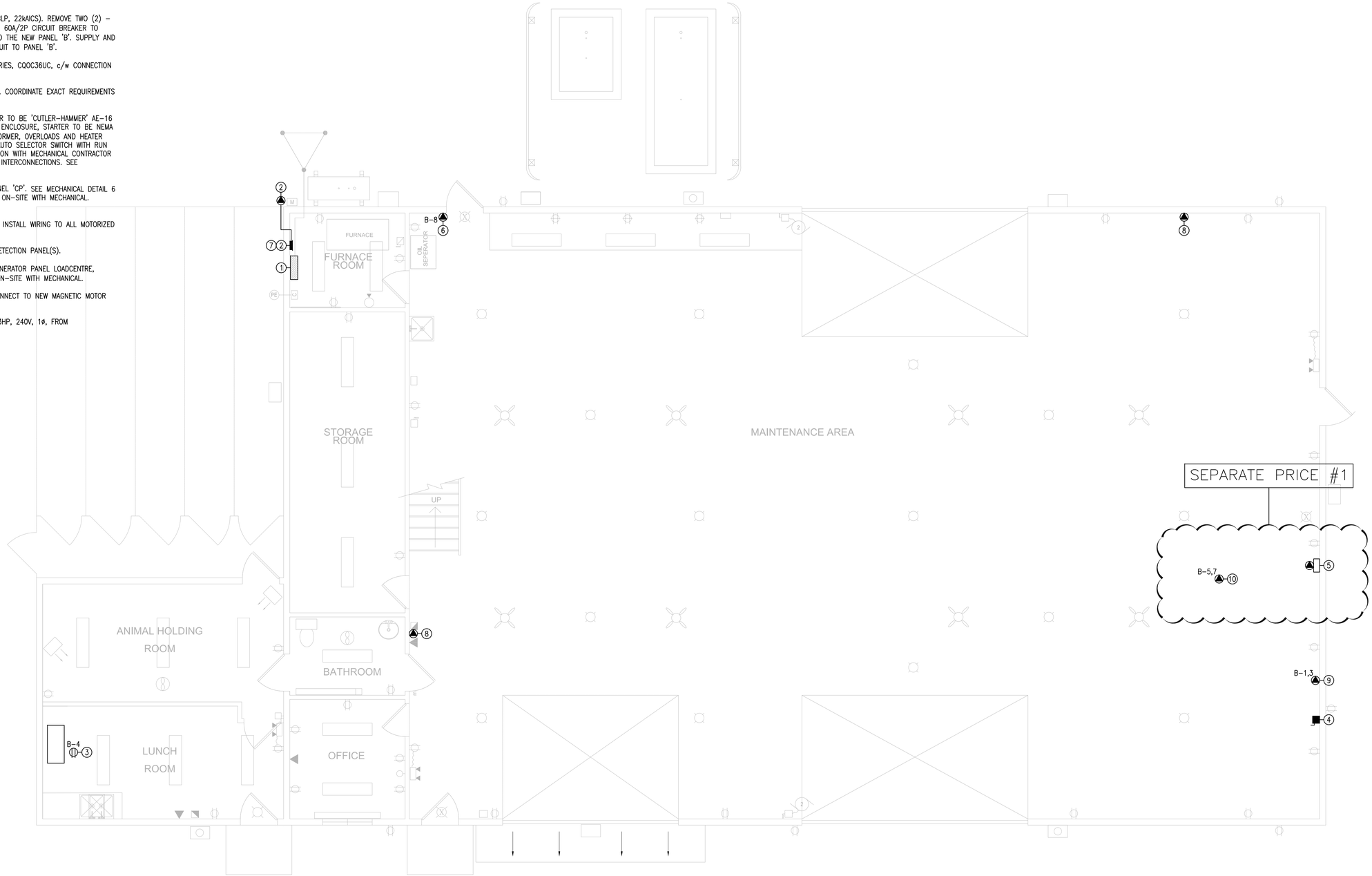

LEVEL 1 LAYOUT

SCALE 1:50 (1:100 WHEN PRINTED ON 11x17)

1 / E-1

0 500 1000 1500 2000 2500

PERMIT	STAMP	SUB CONSULTANT	SUB CONSULTANT		PRIME / MECHANICAL / ELECTRICAL CONSULTANTS	CLIENT	PROJECT TITLE	DRAWING TITLE	DRAWING No.
PROVINCE OF NEWFOUNDLAND AND LABRADOR PEGNL Newfoundland and Labrador PROFESSIONAL ENGINEERS AND GEOSCIENTISTS PERMIT HOLDER This Permit Allows ROWSELL APPLEBY NEWTON ENGINEERING INC. To practice Professional Engineering in Newfoundland and Labrador. Permit No. as issued by APEGN P0255 which is valid for the year 2016				DRAWN: MT DESIGNED: VJ CHECKED: VJ APPROVED: VJ SCALE: AS INDICATED PROJECT No.: 16–026	R|A|N ROWSELL APPLEBY NEWTON ENGINEERING INC 1 Centennial Street Suite 101 Mount Pearl, NL T 709.754.9135		TOWN OF PORTUGAL COVE - ST. PHILIP'S PUBLIC WORKS DEPOT	ELECTRICAL LEVEL 1 LAYOUT	E-1 SHEET No. 1 OF 3

No.	Description	By	yy/mm/dd
A	ISSUED FOR REVIEW	MT	16/04/11

KEY–NOTES:

1. CEILING MOUNTED DUPLEX RECEPTACLE, CSA 5–15R, FOR HRV–1 ON MEZZANINE, LEVEL 2. COORDINATE EXACT REQUIREMENTS AND LOCATION ON–SITE WITH MECHANICAL.
2. NEW DISTRIBUTION PANEL 'B'. 120/240V, 1ø, 3W, 100A, 24CCT, 22kA IC ON MEZZANINE, LEVEL 2.

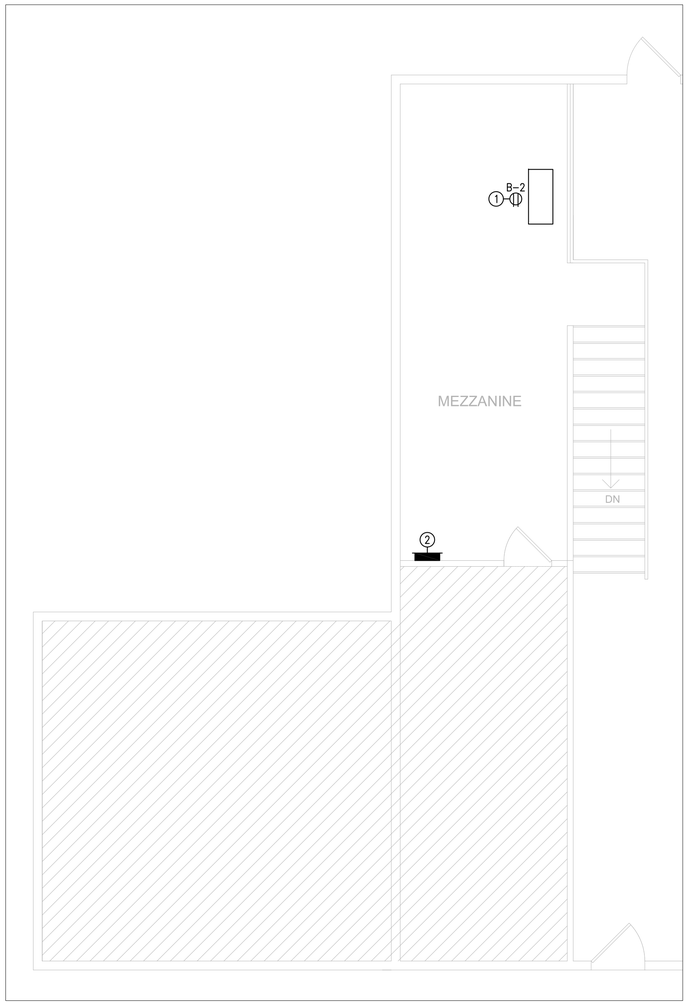

LEVEL 2 LAYOUT

SCALE 1:50 (1:100 WHEN PRINTED ON 11x17)

1 / E-2

0 500 1000 1500 2000 2500

Wire and Conduit Information	
Item	Description
A	3C – #6 RW90 + 1 – #8 TW GND IN 27mm EMT CONDUIT

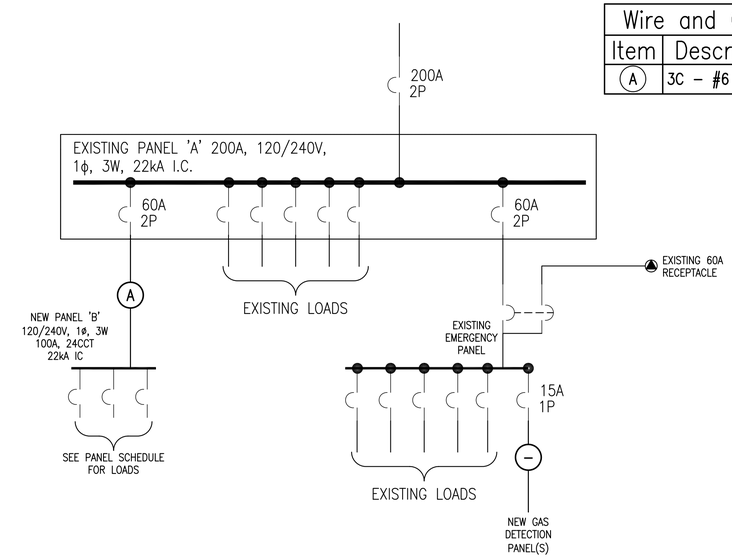

SINGLE LINE DIAGRAM

N.T.S.

2 / E-2

SEPARATE PRICE #1

NEW PANEL "B" 120/240V, 1ø, 3 WIRE												
LOCATION LEVEL 2 MEZZANINE			IC AMPS RMS SYM 22KAICS				MAINS RATING 100A				MOUNTING SURFACE	
ASSIGNED LOAD	WATTAGE ØA	WATTAGE ØB	WIRE AWG	BKR	CCT No.	CCT No.	BKR	WIRE AWG	WATTAGE ØA	WATTAGE ØB	ASSIGNED LOAD	
EXHAUST FAN EF–1	746		2#10	30A 2P	1	2	15A	2#12	500		HRV–1	
		746			3	4	15A	2#12		170	HRV–2	
EXHAUST FAN EF–2	1119		2#10	30A 2P	5	6	15A	–	–		SPARE	
		1119			7	8	15A	2#12		50	MOTORIZED DAMPER	
					9	10						
					11	12						
					13	14						
					15	16						
					17	18						
					19	20						
					21	22						
					23	24						
PHASE TOTAL	#	#							#	#	PHASE TOTAL	
Ø "A" TOTAL	#		REMARKS									
Ø "B" TOTAL		#	1 BREAKER TO BE C/W LOCK–ON DEVICE.									
Ø "C" TOTAL												
TOTAL LOAD (WATTS)	#											

PERMIT

PROVINCE OF NEWFOUNDLAND AND LABRADOR

PEGL Newfoundland and Labrador PROFESSIONAL ENGINEERS AND GEOSCIENTISTS

PERMIT HOLDER This Permit Allows

ROWSELL APPLEBY NEWTON ENGINEERING INC.

To practice Professional Engineering in Newfoundland and Labrador. Permit No. as issued by APEGN P0255 which is valid for the year 2016.

STAMP

SUB CONSULTANT

SUB CONSULTANT

DRAWN	MT
DESIGNED	VJ
CHECKED	VJ
APPROVED	VJ
SCALE	AS INDICATED
PROJECT No.	16–026

No.	Description	By	yy/mm/dd
A	ISSUED FOR REVIEW	MT	16/04/11

PRIME / MECHANICAL / ELECTRICAL CONSULTANTS

R|A|N

ROWSELL APPLEBY NEWTON ENGINEERING INC

1 Centennial Street Suite 101 Mount Pearl, NL T 709.754.9135

CLIENT

PROJECT TITLE

TOWN OF PORTUGAL COVE - ST. PHILIP'S PUBLIC WORKS DEPOT

DRAWING TITLE

ELECTRICAL LEVEL 2 LAYOUT, SINGLE LINE, & PANEL SCHEDULE

DRAWING No.

E-2

SHEET No. 2 OF 3

ELECTRICAL SPECIFICATION

GENERAL

1. THIS SECTION COVERS ITEMS COMMON TO SECTION OF DIVISION 26. THIS SECTION SUPPLEMENTS REQUIREMENTS OF DIVISION 1.

2. QUALIFIED TRADES PEOPLE SHALL BE USED FOR ALL DISCIPLINES OF THE ELECTRICAL WORK REQUIRED FOR THIS PROJECT.

3. GENERAL REQUIREMENTS, INSTRUCTIONS TO BIDDERS AND ANY ADDENDA HERE TO FORM PART OF THE CONTRACT DOCUMENTS AND SHALL BE READ IN CONJUNCTION WITH THEM. WORK TO INCLUDE THE FURNISHING OF ALL LABOR AND MATERIALS UNLESS SPECIFIED OTHERWISE TO COMPLETE AND PUT INTO OPERATING CONDITION ALL ELECTRICAL SYSTEMS AS INDICATED ON THE DRAWINGS AND SPECIFIED HEREIN.

4. RESPONSIBILITY AS TO WHICH TRADE PROVIDES REQUIRED ARTICLES OR MATERIALS RESTS WITH THE GENERAL CONTRACT TRADE. EXTRAS WILL NOT BE CONSIDERED BASED ON GROUNDS OF DIFFERENCE OF INTERPRETATION OF SPECIFICATIONS AS TO WHICH TRADE INVOLVED SHALL PROVIDE CERTAIN SPECIALTIES OR MATERIALS.

DRAWINGS AND SPECIFICATIONS

1. DRAWINGS AND SPECIFICATIONS ARE COMPLIMENTARY EACH TO THE OTHER AND WHAT IS CALLED FOR BY ONE TO BE BINDING AS IF CALLED FOR BY BOTH.

2. SHOULD ANY DISCREPANCY APPEAR BETWEEN DRAWINGS AND SPECIFICATIONS WHICH LEAVES ELECTRICAL TRADE IN DOUBT AS TO TRUE INTENT AND MEANING, OBTAIN RULING FROM ENGINEER BEFORE SUBMITTING TENDER. IF THIS IS NOT DONE, IT WILL BE ASSUMED THAT THE MOST EXPENSIVE ALTERNATIVE HAS BEEN ALLOWED FOR.

EXAMINATION OF OTHER DRAWINGS

1. THE CONTRACTOR IS TO EXAMINE CAREFULLY STRUCTURAL, ARCHITECTURAL AND MECHANICAL DRAWINGS AND WORK OF OTHER TRADES AND SATISFY HIMSELF THAT THE WORK UNDER THIS CONTRACT CAN BE SATISFACTORILY CARRIED OUT WITHOUT CHANGES TO THE BUILDING AS SHOWN ON THE PLANS. SHOULD ANY DIFFICULTY ARISE SHOWING CONFLICT WITH, OR REQUIRING ADDITIONAL WORK BEYOND THE WORK OF THESE DRAWINGS, BRING THIS MATTER TO THE ATTENTION OF THE ENGINEER BEFORE SUBMITTING TENDER.

CODES, STANDARDS AND PERMITS

1. DO COMPLETE INSTALLATION IN ACCORDANCE WITH LATEST EDITION OF CSA C22.1 AND REGULATIONS OF ELECTRICAL INSPECTION AUTHORITY.

2. ABBREVIATIONS FOR ELECTRICAL TERMS: TO CSA Z85–1983.

3. ELECTRICAL TRADE TO OBTAIN ALL PERMITS REQUIRED AND AFTER COMPLETION OF THE WORK FURNISH TO THE ENGINEER A CERTIFICATE OF FINAL INSPECTION AND APPROVAL FROM THE ELECTRICAL INSPECTION DEPARTMENT.

VOLTAGE RATINGS

1. OPERATING VOLTAGES: TO CAN3–C235–83.

2. MOTORS, CONTROL AND DISTRIBUTION DEVICES AND EQUIPMENT TO OPERATE SATISFACTORILY AT 60 HZ WITHIN NORMAL OPERATING LIMITS ESTABLISHED BY ABOVE STANDARD. EQUIPMENT TO OPERATE IN EXTREME OPERATING CONDITIONS ESTABLISHED IN ABOVE STANDARD WITHOUT DAMAGE TO EQUIPMENT.

PERMITS, FEES AND INSPECTION

1. SUBMIT TO ELECTRICAL INSPECTION DEPARTMENT AND SUPPLY AUTHORITY NECESSARY NUMBER OF DRAWINGS AND SPECIFICATIONS FOR EXAMINATION AND APPROVAL PRIOR TO COMMENCEMENT OF WORK.

2. PAY ASSOCIATED FEES.

3. CONTRACTOR SHALL PROVIDE DRAWINGS AND SPECIFICATIONS REQUIRED BY ELECTRICAL INSPECTION DEPARTMENT AND SUPPLY AUTHORITY AT NO COST.

4. NOTIFY ENGINEER OF CHANGES REQUIRED BY ELECTRICAL INSPECTION DEPARTMENT PRIOR TO MAKING CHANGES. FURNISH CERTIFICATES OF ACCEPTANCE FROM AUTHORITIES HAVING JURISDICTION ON COMPLETION OF WORK TO ENGINEER.

5. FURNISH CERTIFICATES OF ACCEPTANCE FROM AUTHORITIES HAVING JURISDICTION ON COMPLETION OF WORK TO ENGINEER.

EXAMINATION OF SITE AND DRAWINGS

1. VISIT SITE BEFORE TENDER CLOSES TO DETERMINE DETAILS OF EXISTING CONDITIONS. NO EXTRA WILL BE ALLOWED FOR ITEMS WHICH WOULD HAVE BEEN PICKED UP BY SITE INSPECITON.

MATERIALS AND EQUIPMENT

1. EQUIPMENT AND MATERIAL TO BE NEW AND CSA CERTIFIED. WHERE THERE IS NO ALTERNATIVE TO SUPPLYING EQUIPMENT WHICH IS NOT CSA CERTIFIED, OBTAIN SPECIAL APPROVAL FROM ELECTRICAL INSPECTION DEPARTMENT.

2. FACTORY ASSEMBLE CONTROL PANELS AND COMPONENT ASSEMBLIES.

3. UNIFORMITY OF MANUFACTURER TO BE MAINTAINED FOR ANY PARTICULAR ITEM THROUGHOUT.

ELECTRIC MOTORS, EQUIPMENT AND CONTROLS

1. UNLESS OTHERWISE SPECIFIED, ELECTRICAL TRADE TO SUPPLY AND INSTALL ALL CONDUIT AND WIRE, FITTINGS AND CONNECTIONS FOR ALL MECHANICAL MORE THAN 50V. 50V AND LESS BY CONTROLS CONTRACTOR. MOTOR PROTECTION SWITCHES COMPLETE WITH OVERLOAD RELAYS ETC. TO BE SUPPLIED AND INSTALLED BY ELECTRICAL TRADE. ELECTRICAL TRADE TO CONFIRM MECHANICAL TRADE SIZE, CHARACTERISTICS AND LOCATIONS OF ALL MECHANICAL EQUIPMENT BEFORE INSTALLATION OF CONDUIT ETC.

WIRING TERMINATIONS

1. LUGS, TERMINALS, SCREWS USED FOR TERMINATION OF WIRING TO BE SUITABLE FOR EITHER COPPER OR ALUMINUM CONDUCTORS.

MANUFACTURERS AND CSA LABELS

1. VISIBLE AND LEGIBLE AFTER EQUIPMENT IS INSTALLED.

FIELD QUALITY CONTROL

1. FURNISH MANUFACTURER'S CERTIFICATE OR LETTER CONFIRMING THAT THE INSTALLATION AS IT PERTAINS TO EACH SYSTEM, HAS BEEN INSTALLED TO MANUFACTURER'S INSTRUCTIONS.

2. INSULATION RESISTANCE TESTING.
   - .1 MEGGER CIRCUITS, FEEDERS AND EQUIPMENT UP TO 350 V WITH A 500 V INSTRUMENT.
   - .2 MEGGER 350–600 V CIRCUITS, FEEDERS AND EQUIPMENT WITH A 1000 V INSTRUMENT.
   - .3 CHECK RESISTANCE TO GROUND BEFORE ENERGIZING.
   - .4 CARRY OUT TESTS IN PRESENCE OF ENGINEER.
   - .5 PROVIDE INSTRUMENTS, METERS, EQUIPMENT AND PERSONNEL REQUIRED TO CONDUCT TESTS DURING AND AT CONCLUSION OF PROJECT.
   - .6 SUBMIT TEST RESULTS FOR ENGINEER'S REVIEW.

CO–ORDINATION OF PROTECTIVE DEVICES

1. ENSURE CIRCUIT PROTECTIVE DEVICES SUCH AS OVERCURRENT TRIPS, RELAYS AND FUSES ARE INSTALLED TO REQUIRED VALUES AND SETTINGS.

SAFETY

1. ENSURE THAT ALL PERSONNEL ABIDE BY SAFETY PRACTICES IN PLACE ON THIS WORK SITE AND BY REGULATIONS MANDATED BY OCCUPANCY, HEALTH AND SAFETY.

2. ENSURE PERSONNEL DO NOT WORK ON ENERGIZED EQUIPMENT. ENSURE THE POWER SUPPLY TO ALL EQUIPMENT TO BE WORKED ON IS DE–ENERGIZED AND THE SOURCE DEVICE IS TURNED OFF, LOCKED OUT AND TAGGED.

SHOP DRAWINGS

1. PRIOR TO ORDERING OF ANY MATERIAL OR EQUIPMENT, PROVIDE SHOP DRAWINGS AND/OR DESCRIPTIVE DATA FOR REVIEW WITH THE NAME OF THE PROJECT ON EACH BROCHURE OR CATALOGUE PAGE.

2. SUBMIT TWO (2) COPIES OF ELECTRICAL SHOP DRAWINGS FOR REVIEW BY THE ENGINEERS. THIS REVIEW SHALL NOT RELIEVE THE CONTRACTOR OR SUPPLIER OF RESPONSIBILITY FOR COMPLIANCE WITH THE CONTRACT DOCUMENTS.

3. SUBMIT SHOP DRAWINGS FOR:
   - A)LIGHTING FIXTURES.
   - B)RECEPTACLES & SWITCHES.
   - C)PANELBOARDS.
   - D)EXIT & EMERGENCY LIGHTING.
   - E)ELECTRIC HEATERS.
   - F)DISCONNECT SWITCHES.

WIRING METHOD

1. ALL BUILDING WIRE TO BE COPPER, 600V, RW90 XPLE, UNLESS SPECIFIED OTHERWISE, MINIMUM CONDUCTOR SIZE #12 AWG EXCEPT FOR CONTROL WIRING. ALL WIRING TO BE RUN IN CONDUIT, NMD–90, OR BX CABLE AS PER THE CANADIAN ELECTRICAL CODE. NMD–90 IN WOOD STUD WALLS. BX CABLE IN STEEL STUD WALLS. CONDUIT IN CONCRETE MASONRY BLOCK WALLS.
2. ALUMINUM WIRING NOT ALLOWED.
3. INSTALL DEDICATED TW COPPER WIRE IN ALL CONDUITS FOR BONDING.
4. UTILIZE CONCRETE OR MASONRY BOXES AS APPROPRIATE.
5. WIRING & CONDUIT TO BE CONCEALED AT ALL TIMES UNLESS OTHERWISE NOTED.
6. MINIMUM CONDUIT SIZE: 21MM.

TESTS

1. ALL EQUIPMENT PROVIDED UNDER THIS SECTION SHALL BE TESTED TO ENSURE THAT IT IS FUNCTIONING PROPERLY. PROVIDE A SIGNED STATEMENT CERTIFYING THAT ALL EQUIPMENT IS FUNCTIONING PROPERLY, AND THAT THE WORK SPECIFIED AND/OR REQUIRED HAS BEEN COMPLETED.

2. TESTS REQUIRED BY LOCAL AUTHORITIES SHALL BE THE RESPONSIBILITY OF THE CONTRACTOR. WHEN THE WORK IS COMPLETED, IT SHALL BE TESTED IN ITS ENTIRETY, AND SHALL BE IN GOOD WORKING ORDER BEFORE THE OWNER'S CERTIFICATE OF ACCEPTANCE SHALL BE ISSUED.

3. THE CONTRACTOR WILL BE RESPONSIBLE FOR THE SUPPLY OF SUFFICIENT POWER ON A TEMPORARY BASIS TO ALLOW TESTING OF ALL EQUIPMENT AND SYSTEMS. THESE WILL BE TESTED IN THE PRESENCE OF THE ENGINEER.

4. FURNISH MANUFACTURER'S CERTIFICATE OR LETTER CONFIRMING THAT ENTIRE INSTALLATION AS IT PERTAINS TO EACH SYSTEM HAS BEEN INSTALLED TO MANUFACTURER'S INSTRUCTIONS.

5. BEFORE ENERGIZING ANY PORTION OF ELECTRICAL SYSTEM, PERFORM MEGGER TESTS ON ALL FEEDERS AND BRANCH CIRCUITS. RESULTS OF SUCH TESTS TO CONFORM TO REQUIREMENTS OF THE CANADIAN ELECTRICAL CODE AND BE TO SATISFACTION OF AUTHORIZED INSPECTION AGENCY AND THE ENGINEER.

6. UPON COMPLETION AND IMMEDIATELY PRIOR TO FINAL INSPECTION AND TAKEOVER, CHECK LOAD BALANCE ON ALL FEEDERS AND AT DISTRIBUTION CENTERS, PANELS, ETC. TESTS TO BE CARRIED OUT BY TURNING ON ALL POSSIBLE LOADS AND CHECKING LOAD BALANCE. IF LOAD UNBALANCE EXCEEDS 15% RECONNECT CIRCUITS TO BALANCE LOAD.

MAINTENANCE MANUALS

1. PROVIDE TWO (2) COPIES OF MAINTENANCE/SERVICE MANUALS FOR ALL ELECTRICAL COMPONENTS SUPPLIED UNDER THIS CONTRACT. INCORPORATE ALL DATA INTO 3 RING BINDERS C/W INDEX & TABS. INCLUDE INSTALLATION & MAINTENANCE MANUALS BY ALL EQUIPMENT SUPPLIERS AS WELL AS APPROVED SHOP DRAWINGS.

PANELBOARDS

1. VOLTAGE, AMPERAGE, PHASE AND INTERRUPTING CAPACITY AS PER DRAWINGS. NUMBER OF CIRCUITS AS PER DRAWINGS.
2. RESIDENTIAL GRADE PANELS UNACCEPTABLE.
3. ALUMINUM BUS WITH NEUTRAL.
4. MAINS SUITABLE FOR BOLT–ON BREAKERS.
5. TRIM WITH CONCEALED FRONT BOLTS, HINGES AND FLAT STYLE DOOR. TWO KEYS.
6. TRIM AND DOOR – BAKED GREY ENAMEL, OF ONE MANUFACTURER.
7. NAMEPLATE, LAMIDCOID LABEL SCREWED TO DOOR, INDICATING PANEL DESIGNATION, VOLTAGE, AMPERAGE AND PHASE.
8. TYPE WRITTEN, REMOVABLE, CIRCUIT DIRECTORY. DIRECTORY TO INDICATE TYPE OF LOAD AND ASSOCIATED ROOM LOAD.
9. STANDARD OF ACCEPTANCE: CUTLER HAMMER POWERLINE
   - .1 ACCEPTABLE ALTERNATES: SIEMENS, SQUARE D.

MOTOR STARTERS

1. MAGNETIC MOTOR STARTERS TO BE QUICK MAKE QUICK BREAK WITH THERMAL OVERLOAD. CEMA 1 ENCLOSURES UNLESS OTHERWISE NOTED. ALL MAGNETIC STARTERS SHALL HAVE CONTROL TRANSFORMER, PILOT LIGHTS, H.O.A. SWITCHES AND TWO AUXILLIARY CONTACTS AS REQUIRED. COMBINATION MAGNETIC STARTERS ARE TO BE C/W CIRCUIT BREAKER TYPE DISCONNECT SWITCH.

2. FURNISH DISCONNECTS FOR ALL MOTORS AS REQUIRED BY THE CANADIAN ELECTRICAL CODE, TYPE AS INDICATED ABOVE.

PERMIT

PROVINCE OF NEWFOUNDLAND AND LABRADOR
PEGNL Newfoundland and Labrador
PERMIT HOLDER
This Permit Allows
ROWSELL APPLEBY NEWTON ENGINEERING INC.
To practice Professional Engineering in Newfoundland and Labrador. Permit No. as issued by APEGN P0255 which is valid for the year 2016

STAMP

SUB CONSULTANT

SUB CONSULTANT

DRAWN	MT
DESIGNED	VJ
CHECKED	VJ
APPROVED	VJ
SCALE	AS INDICATED
PROJECT No.	16–026

No.	Description	By	yy/mm/dd
A	ISSUED FOR REVIEW	MT	16/04/11

PRIME / MECHANICAL / ELECTRICAL CONSULTANTS

R|A|N

ROWSELL APPLEBY NEWTON ENGINEERING INC
1 Centennial Street Suite 101 Mount Pearl, NL
T 709.754.9135

CLIENT

PROJECT TITLE

TOWN OF PORTUGAL COVE - ST. PHILIP'S PUBLIC WORKS DEPOT

DRAWING TITLE

ELECTRICAL SPECIFICATIONS

DRAWING No.

E-3

SHEET No.

3 OF 3

MECHANICAL SPECIFICATION

GENERAL

1. THIS CONTRACTOR SHALL BE RESPONSIBLE TO SUPPLY AND INSTALL ALL MECHANICAL SYSTEMS AS DETAILED IN ACCORDANCE WITH THE LATEST EDITIONS OF THE NATIONAL BUILDING CODE, NATIONAL PLUMBING CODE, ASHRAE, SMACNA, NFPA, NFC, AND TO THE REQUIREMENTS OF THE AUTHORITY HAVING JURISDICTION.
2. THIS CONTRACTOR SHALL VISIT THE SITE PRIOR TO SUBMITTING BID TO DETERMINE EXISTING CONDITIONS.
3. IT IS THE INTENT OF THESE DRAWINGS TO PROVIDE FOR A COMPLETE AND FULLY OPERATING SYSTEM IN ACCORDANCE WITH ALL APPLICABLE CODES. NOT WITHSTANDING THAT THE DRAWINGS MAY NOT COVER EACH AND EVERY ITEM REQUIRED FOR THE COMPLETE MECHANICAL INSTALLATION, THE MECHANICAL CONTRACTOR SHALL SUPPLY ALL LABOUR, MATERIALS, TOOLS, EQUIPMENT AND TRANSPORTATION NECESSARY FOR THE COMPLETE INSTALLATIONS OF THE MECHANICAL SYSTEM ON SITE.
4. THE CONTRACTOR IS TO ENSURE THAT THE DELIVERY TIME OF ALL MECHANICAL EQUIPMENT DOES NOT CAUSE A DELAY IN THE SCHEDULING OF THIS PROJECT. NOTIFY THE ENGINEER IF ANY PROBLEMS ARISE.
5. EMPLOY ONLY TRADESPEOPLE WITH PROPER LICENSES FOR THE WORK.
6. DRAWINGS ARE DIAGRAMMATIC AND APPROXIMATE TO SCALE. THE CONTRACT DOCUMENTS ESTABLISH SCOPE, MATERIALS AND QUALITY AND ARE NOT A COMPREHENSIVE BILL OF MATERIALS, OR DETAILED INSTALLATIONS INSTRUCTIONS.
7. CO–OPERATE WITH OTHER SECTIONS AND TRADE DISCIPLINES AS REQUIRED FOR THE COMPLETION OF THE TOTAL WORK. REPORT ANY DISCREPANCIES TO ENGINEER.
8. ALL FIRE ASSEMBLIES MUST BE MAINTAINED.
9. CONFORM TO MANUFACTURERS INSTALLATION INSTRUCTIONS, DETAILS, AND PROCEDURES FOR EQUIPMENT INSTALLATION AND START–UP. SUPPLY AND INSTALL ALL MANUFACTURER'S RECOMMENDED ACCESSORIES FOR EACH UNIT INCLUDING VALVES, FITTING, GAUGES, FILTERS, ETC.
10. SUBMIT TWO (2) SHOP DRAWINGS OF ALL EQUIPMENT, VALVES, PIPING, INSULATION, ETC., FOR APPROVAL. EQUIPMENT IS NOT TO BE PURCHASED PRIOR TO SHOP DRAWING APPROVAL.
11. OBTAIN AND PAY FOR ALL PERMITS AND FEES REQUIRED TO CARRY OUT AND COMPLETE THE WORK.
12. ALL WORK SHALL BE GUARANTEED FOR A PERIOD OF ONE (1) YEAR AFTER DATE OF ACCEPTANCE BY OWNER.
13. PROVIDE TWO (2) COPIES OF AS–BUILT DRAWINGS AND MAINTENANCE MANUALS FOR APPROVAL BY ENGINEER.
14. COORDINATE ALL WORK AND SHUTDOWNS WITH OWNER. GIVE AT LEAST 48 HOUR WRITTEN NOTICE BEFORE SHUTDOWN.
15. PROTECT ALL EQUIPMENT FROM DIRT AND DEBRIS IN WORK AREA.

HVAC

1. THIS CONTRACTOR TO PROVIDE ALL NEW DUCTWORK, GRILLES, DIFFUSERS, ETC. AS INDICATED IN THE DRAWINGS AND AS REQUIRED TO COMPLETE THE NEW SYSTEM.
2. ALL DUCTWORK UNLESS NOTED OTHERWISE, SHALL BE RUN USING PRIME QUALITY GALVANIZED SHEET METAL OF THE FOLLOWING THICKNESS: UP TO 300MM: 0.45MM THICK, 325MM TO 450MM; 0.61MM, 475MM TO 1075MM: 0.76MM. ALL NEW DUCT SHALL BE CONSTRUCTED AND INSTALLED AS PER LATEST ASHRAE AND SMACNA STANDARDS.
3. ALL DUCT JOINTS TO BE SEALED.
4. ALL AIR SYSTEMS TO BE BALANCED TO THE FLOWS INDICATED AND A BALANCING REPORT TO BE SUBMITTED FOR APPROVAL.
5. ALL SUPPLY DUCT TO BE INSULATED WITH 25MM FOIL FACE INSULATION WHERE NOTED.
6. SUPPLY GRILLE SA–1, SHALL BE E.H. PRICE SERIES 520 OR EQUAL.
7. RETURN GRILLE RA–1, SHALL BE E.H. PRICE SERIES 530 OR EQUAL.
8. ALL FLEXIBLE DUCTWORK SHALL BE OF THE INSULATED TYPE "CWG" OR APPROVED EQUAL.
9. SUPPLY AND INSTALL. ALL FIRE DAMPERS AND FIRE STOP FLAPS C/W FUSIBLE LINKS AND ACCESS DOORS AS REQUIRED UNDER THE NATIONAL BUILDING CODE & NATIONAL FIRE CODE. DAMPERS SHALL BE TYPE 'B', 100% FREE AREA UNLESS NOTED AND SHALL BE ULC LISTED FOR THE SPECIFIC APPLICATION AND INSTALLATION ORIENTATION. INSTALL AT OUTLETS OR DUCTS PASSING THROUGH FIRE SEPARATIONS. INSTALL FIRE DAMPERS IN ACCORDANCE WITH NFPA 90A AND ULC STANDARDS WITH BACKUP ANGLES AND BREAKAWAY JOINTS. PROVIDE DUCT ACCESS DOORS AS WELL AS DRYWALL ACCESS DOORS FOR COMPLETE ACCESSIBILITY. THE CONTRACTOR SHALL DEMONSTRATE COMPLETE KNOWLEDGE AND ABILITY TO INSTALL THESE DEVICES TO THE ULC INSTRUCTIONS BEFORE PROCEEDING WITH SITE WORK. FIRE DAMPERS THAT HAVE BEEN INSTALLED PRIOR TO THE APPROVAL OF THE SHOP DRAWINGS SHALL BE REMOVED FROM THE MOUNTING POSITION.
10. HEAT RECOVERY VENTILATOR HRV–1 EQUIVALENT TO NU–AIR MODEL "NU500". POWER: 500W @ 120/1/60–CORDED PLUG. FLOW: 160L/s @ 150Pa. C/W TIME CLOCK, WALL CONTROLLER "WIN–1", EXHAUST ONLY DEFROST, VIBRATION ISOLATORS AND MOUNTING BRACKETS.
11. HEAT RECOVERY VENTILATOR HRV–2 EQUIVALENT TO NU–AIR MODEL "NU305". POWER: 170W @ 120/1/60–CORDED PLUG. FLOW: 80L/s @ 100Pa. C/W WALL CONTROLLER "WIN–1", EXHAUST ONLY DEFROST, VIBRATION ISOLATORS AND MOUNTING BRACKETS.

SOURCE CAPTURE VEHICLE EXHAUST SYSTEM (SEPARATE PRICE #1)

1. SUPPLY AND INSTALL SOURCE CAPTURE VEHICLE EXHAUST SYSTEM AND ASSOCIATED CONTROLS AS SPECIFIED AND DETAILED IN THESE DRAWINGS.

VENTILATION

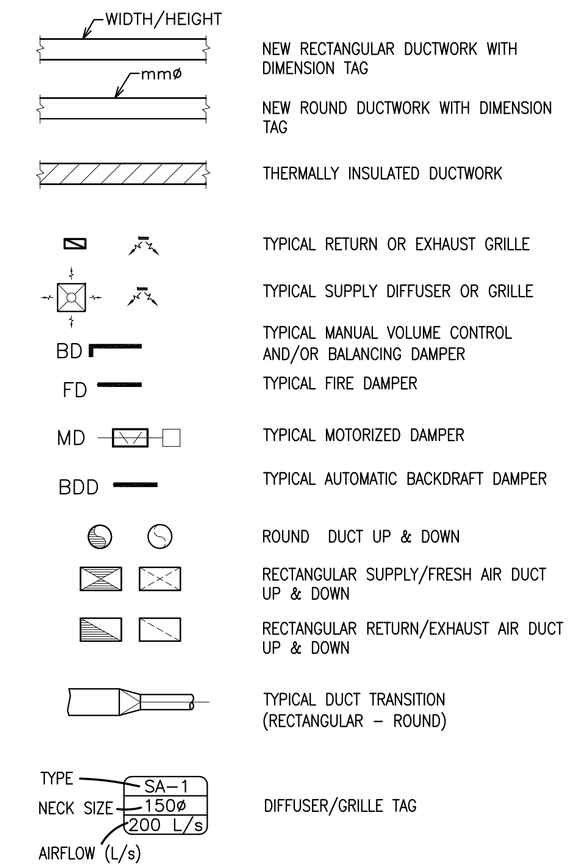

PERMIT

PROVINCE OF NEWFOUNDLAND AND LABRADOR
PEGL Newfoundland and Labrador PROFESSIONAL ENGINEERS AND GEOSCIENTISTS
PERMIT HOLDER This Permit Allows
ROWSELL APPLEBY NEWTON ENGINEERING INC.
To practice Professional Engineering in Newfoundland and Labrador. Permit No. as issued by APEGN P0255 which is valid for the year 2016.

STAMP

SUB CONSULTANT

SUB CONSULTANT

DRAWN	SP
DESIGNED	CR
CHECKED	CR
APPROVED	CR
SCALE	AS INDICATED
PROJECT No.	16–026

No.	Description	By	yy/mm/dd
A	ISSUED FOR REVIEW	SP	16/04/11

PRIME / MECHANICAL / ELECTRICAL CONSULTANTS

R|A|N
ROWSELL APPLEBY NEWTON ENGINEERING INC
1 Centennial Street Suite 101 Mount Pearl, NL
T 709.754.9135

CLIENT

PROJECT TITLE

TOWN OF PORTUGAL COVE - ST. PHILIP'S PUBLIC WORKS DEPOT

DRAWING TITLE

MECHANICAL SPECIFICATION LEGEND AND LIST OF DRAWINGS

DRAWING No.

M-1

SHEET No. –

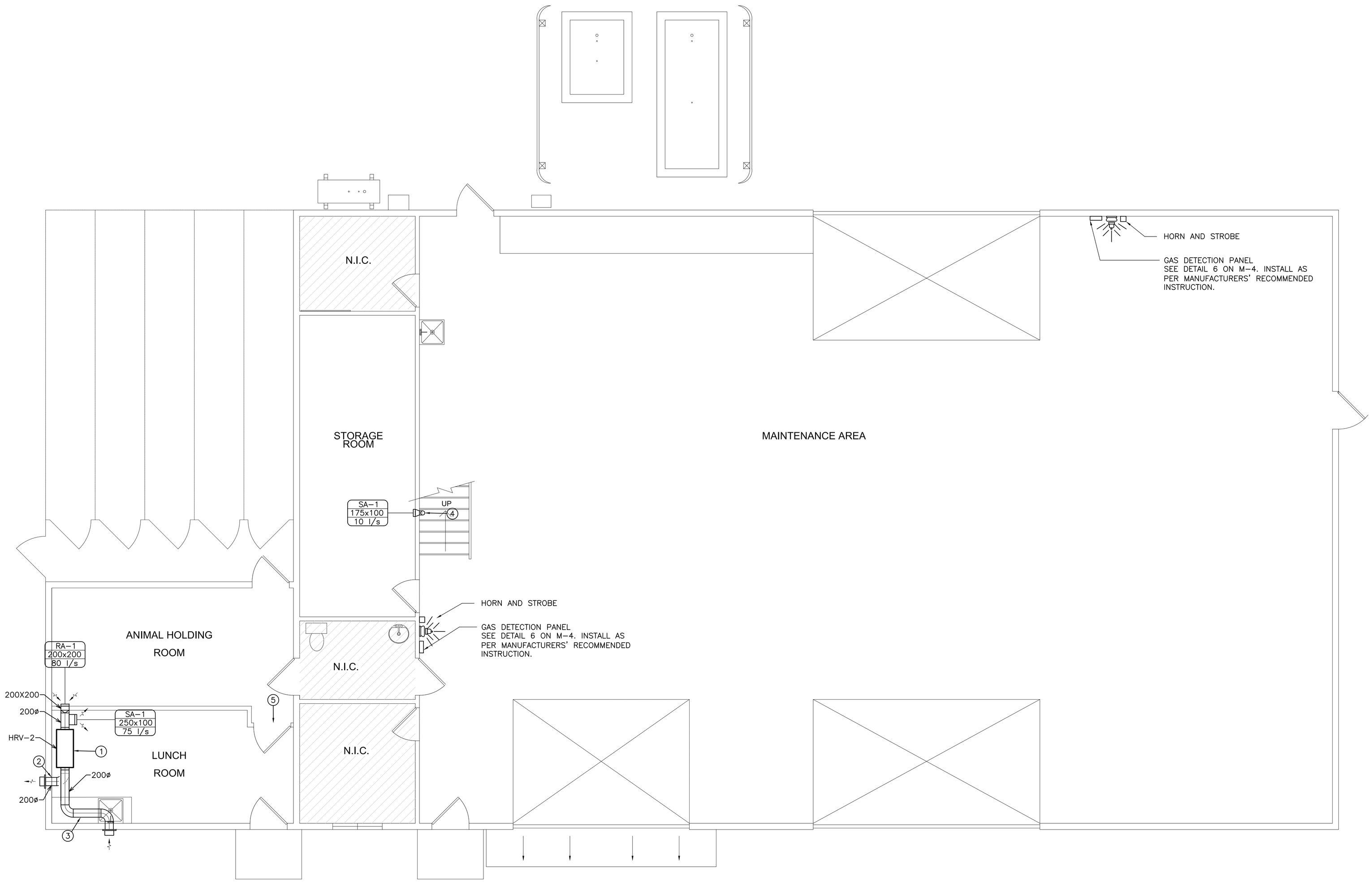

KEYNOTES:

1. NEW HRV, HRV-2, SECURELY FASTENED TO BUILDING STRUCTURE. SEE SCHEDULE, HRV MOUNTING AND CONNECTION DETAIL AND HRV CONTROL DETAIL 5 ON M-4 & 4 ON M-5. ROUTE CONDENSATE DRAIN UNDER COUNTER TO TIE INTO SINK DRAIN BEFORE TRAP.
2. 200mmø THERMALLY INSULATED EXHAUST DUCT TO BUILDING EXTERIOR. PROVIDE AND INSTALL 200ø WALL CAP C/W BIRDSCREEN.
3. 250mmø THERMALLY INSULATED SUPPLY DUCT TO BUILDING EXTERIOR. PROVIDE AND INSTALL 200ø WALL CAP C/W BIRDSCREEN.
4. 100mmø DUCT DROP FROM ABOVE.
5. UNDERCUT DOOR BY 25mm.

SCALE = 1:50 (0 500 1000 1500 2000 2500)

PERMIT	STAMP	SUB CONSULTANT	SUB CONSULTANT				PRIME / MECHANICAL / ELECTRICAL CONSULTANTS	CLIENT	PROJECT TITLE	DRAWING TITLE	DRAWING No.
PROVINCE OF NEWFOUNDLAND AND LABRADOR PEGL Newfoundland and Labrador PERMIT HOLDER This Permit Allows ROWSELL APPLEBY NEWTON ENGINEERING INC. To practice Professional Engineering in Newfoundland and Labrador. Permit No. as issued by APEGN P0255 which is valid for the year 2016 .				DRAWN: SP DESIGNED: CR CHECKED: CR APPROVED: CR SCALE: AS INDICATED PROJECT No.: 16-026	No. / Description / By / yy/mm/dd A / ISSUED FOR REVIEW / SP / 16/04/11		R|A|N ROWSELL APPLEBY NEWTON ENGINEERING INC 1 Centennial Street Suite 101 Mount Pearl, NL T 709.754.9135		TOWN OF PORTUGAL COVE - ST. PHILIP'S PUBLIC WORKS DEPOT	NEW VENTILATION LAYOUT – LEVEL 1	M-2 SHEET No. –

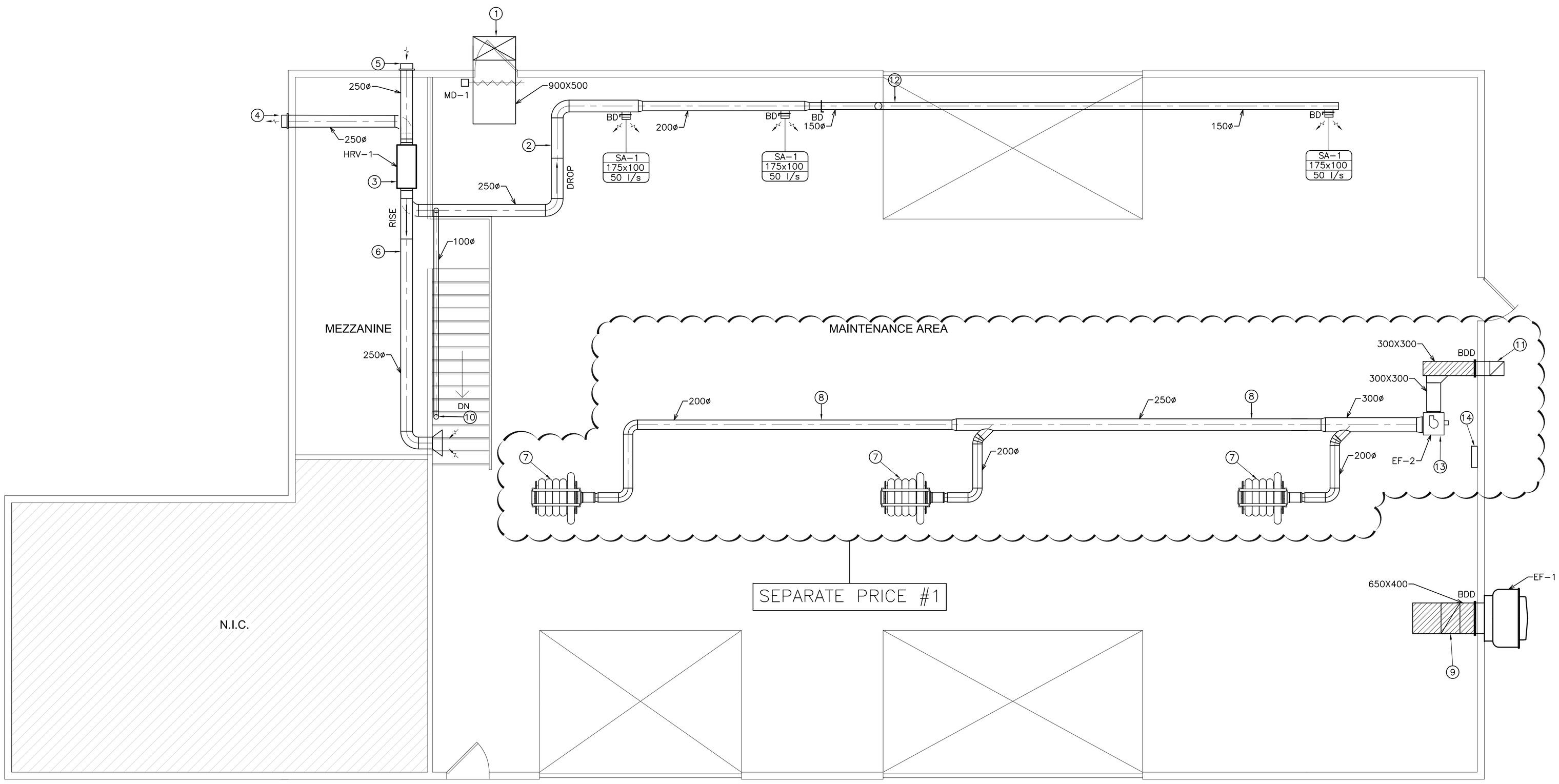

KEYNOTES:

1. 900X500 WALL MOUNTED HOOD SECURELY FASTENED TO BUILDING STRUCTURE. PROVIDE THERMALLY INSULATED CONTROL DAMPER EQUAL TO TAMCO SERIES 9000. SEE DETAIL 1 ON DRAWING M-5.
2. SUPPLY DUCTWORK TO DROP DOWN TO RUN BELOW EXISTING DUCTWORK RUNNING ALONG WALL IN THIS AREA. PROVIDE OFFSETS AND FITTINGS AS REQUIRED. CONFIRM AND COORDINATE ALL EXISTING LAYOUTS ON SITE.
3. NEW HRV, HRV-1, SECURELY FASTENED TO BUILDING STRUCTURE. SEE SCHEDULE, HRV MOUNTING AND CONNECTION DETAIL AND HRV CONTROL DETAIL 4 & 5 ON M-4. ROUTE CONDENSATE DRAIN TO TIE INTO SINK DRAIN IN MAINTENANCE AREA BEFORE TRAP.
4. 250mmø THERMALLY INSULATED EXHAUST DUCT TO BUILDING EXTERIOR. PROVIDE AND INSTALL 250ø WALL CAP C/W BIRDSCREEN.
5. 250mmø THERMALLY INSULATED SUPPLY DUCT TO BUILDING EXTERIOR. PROVIDE AND INSTALL 250ø WALL CAP C/W BIRDSCREEN.
6. RETURN DUCTWORK TO RISE UP TO RUN ABOVE BEAM IN THIS AREA IN THIS AREA. PROVIDE OFFSETS AND FITTINGS AS REQUIRED. CONFIRM AND COORDINATE ALL EXISTING LAYOUTS ON SITE.
7. INSTALL NEW SOURCE CAPTURE EXHAUST HOSE REELS IN ACCORDANCE WITH MANUFACTURERS RECOMMENDATIONS. SYSTEM EQUIVALENT TO SOURCETEC MODEL EHR63JH – 150mmø X 10m (600"F) MANUAL SPRING HOSE REELS C/W MOUNTING BRACKET, MICRO SWITCH SERIES "MSF", 150mm STACK ADAPTOR W/ MANUAL DAMPER "5606", TAIL PIPE ADAPTORS "2606" AND "CP" CONTROL PANEL C/W CONTACTS FOR AUTOMATIC SYSTEM (INC. DISCONNECT) SEE DETAIL 3 ON M-4 & 5 ON M-5.
8. COORDINATE DUCTWORK IN THIS AREA WITH EXISTING HEATING AIR DUCTWORK, STRUCTURE, LIGHTS AND RAIL & PULLEY SYSTEM. PROVIDE OFFSETS AND FITTINGS AS REQUIRED. CONFIRM ALL EXISTING LAYOUTS ON SITE.
9. ROUTE DUCTWORK DOWN TO 450mm A.F.F AND TERMINATE OPEN ENDED. COVER WITH 12mm WIRE MESH. COORDINATE EXACT LOCATION WITH ALL OTHER DISCIPLINES. SEE DETAIL ON 3 ON M-4.
10. 100mmø DUCTWORK TO DROP DOWN ON WALL BETWEEN TWO EXISTING DROPS ALREADY IN PLACE. DUCT TO PENETRATE WALL IN TO STORAGE ROOM.
11. 300X400 WALL MOUNTED HOOD SECURELY FASTENED TO BUILDING STRUCTURE. SEE DETAIL ON DRAWING 1 ON M-5.
12. DUCTWORK TO RISE UP TO RUN ABOVE OVERHEAD DOOR.
13. SEE SOURCE CAPTURE EXHAUST CONTROL DETAIL 6 ON M-4.
14. SOURCETEC CUSTOM CONTROL PANEL C/W MOTOR STARTER AND CONTACTS FOR AUTOMATIC SYSTEM.

SCALE = 1:50 (0 500 1000 1500 2000 2500)

PERMIT

PROVINCE OF NEWFOUNDLAND AND LABRADOR
PEGNL Newfoundland and Labrador — PROFESSIONAL ENGINEERS AND GEOSCIENTISTS
PERMIT HOLDER
This Permit Allows
ROWSELL APPLEBY NEWTON ENGINEERING INC.
To practice Professional Engineering in Newfoundland and Labrador. Permit No. as issued by APEGN P0255 which is valid for the year 2016

STAMP

SUB CONSULTANT

SUB CONSULTANT

DRAWN	SP
DESIGNED	CR
CHECKED	CR
APPROVED	CR
SCALE	AS INDICATED
PROJECT No.	16-026

No.	Description	By	yy/mm/dd
A	ISSUED FOR REVIEW	SP	16/04/11

PRIME / MECHANICAL / ELECTRICAL CONSULTANTS

R|A|N
ROWSELL APPLEBY NEWTON ENGINEERING INC
1 Centennial Street Suite 101 Mount Pearl, NL
T 709.754.9135

CLIENT

PROJECT TITLE

TOWN OF PORTUGAL COVE - ST. PHILIP'S PUBLIC WORKS DEPOT

DRAWING TITLE

NEW VENTILATION LAYOUT – LEVEL 2

DRAWING No.

M-3

SHEET No.

–

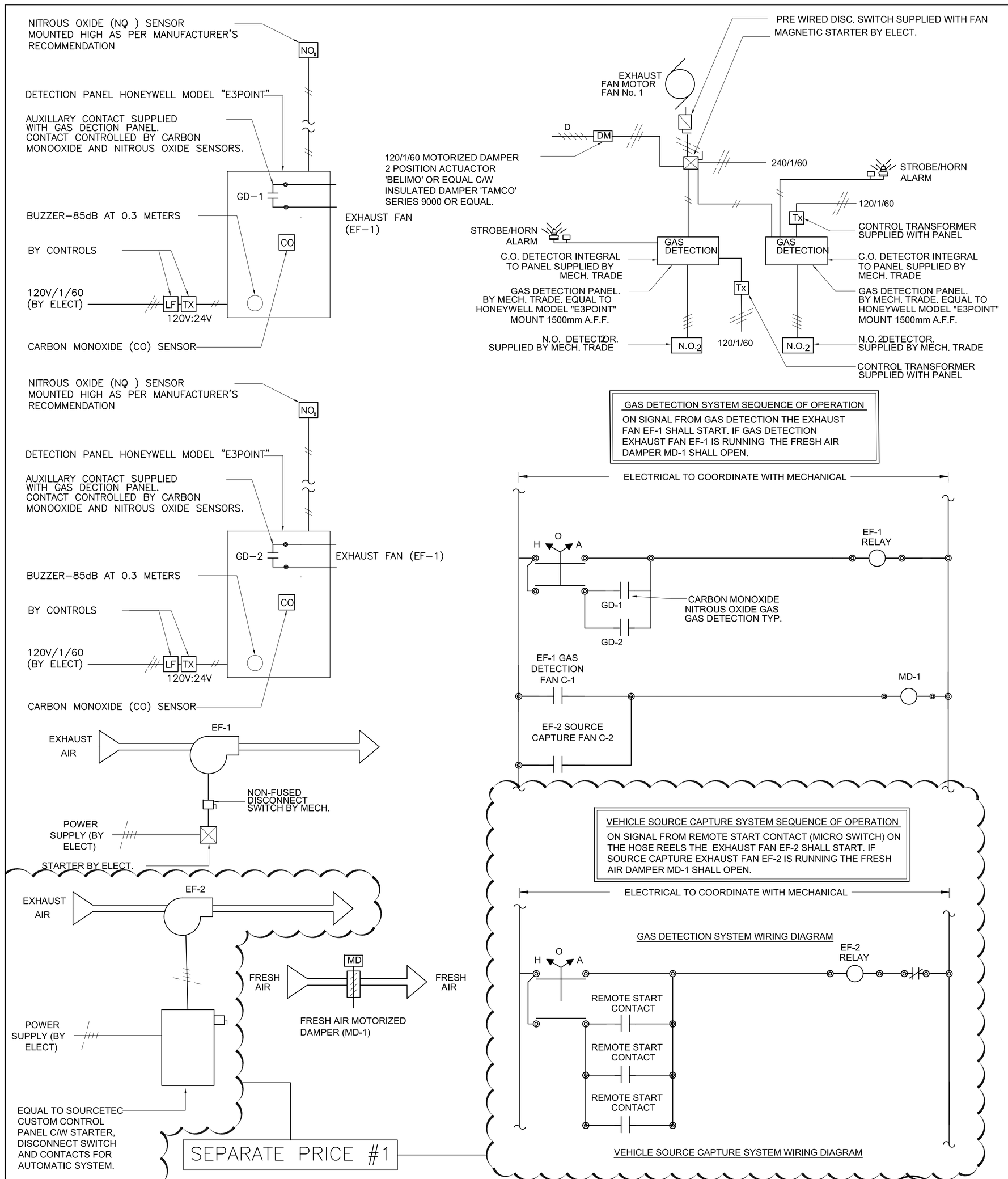

CONTROL DETAIL FOR EMERGENCY EXHAUST SYSTEM AND VEHICLE SOURCE CAPTURE SYSTEM

N.T.S.

6 / M-4

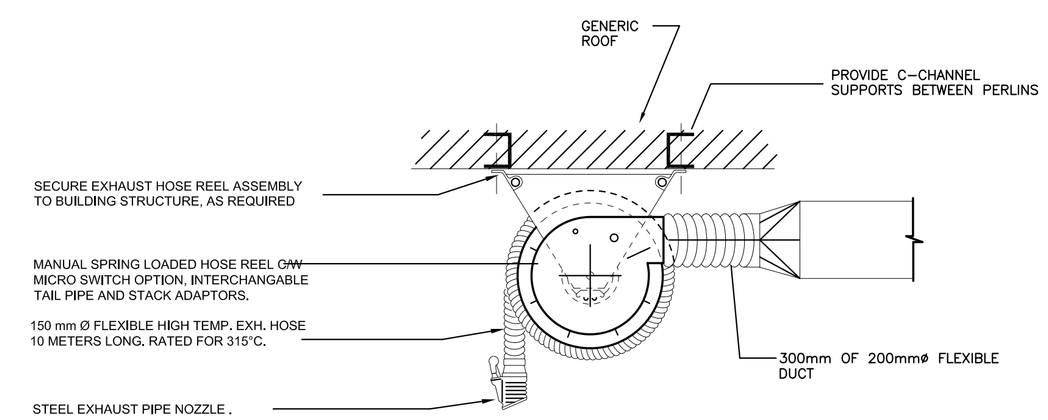

VEHICLE EXHAUST HOSE REEL ASSEMBLY MOUNTING DETAIL

N.T.S.

3 / M-4

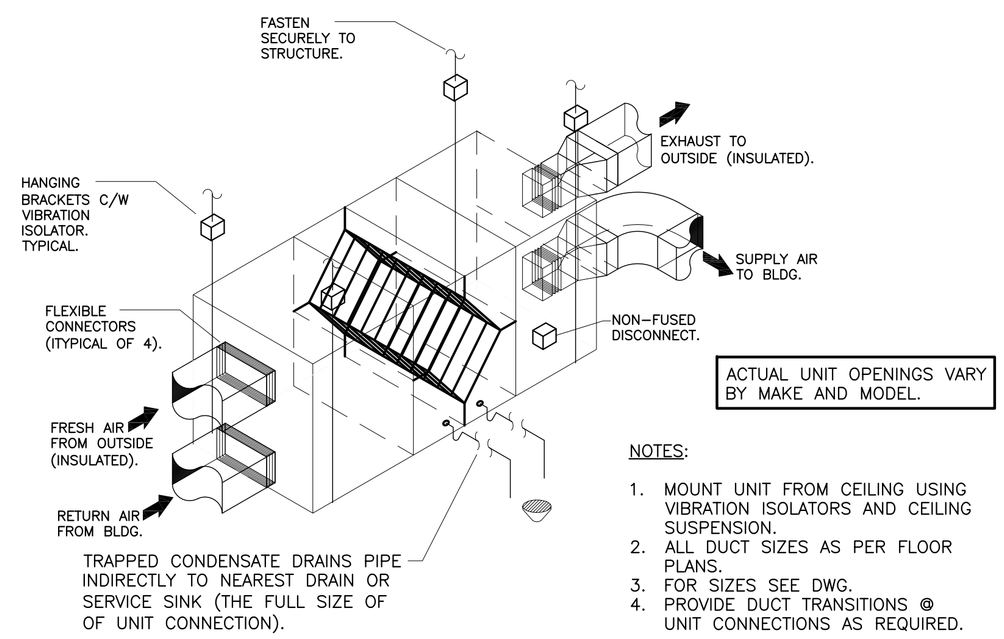

TYPICAL HRV MOUNTING AND CONNECTIONS DETAIL

N.T.S.

4 / M-4

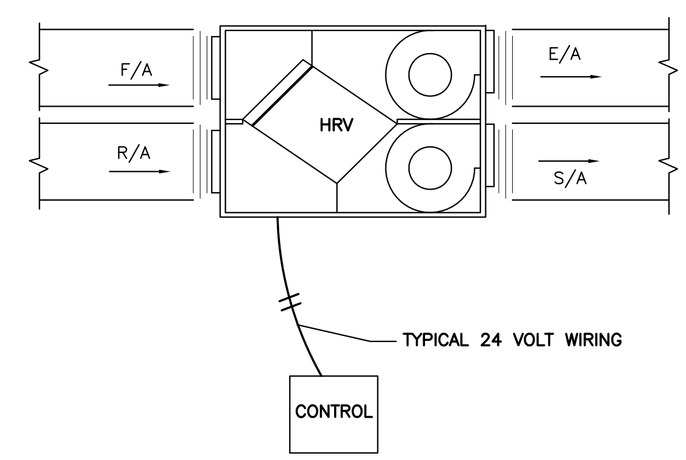

SEQUENCE: 1. TIME OF DAY CONTROL OF HRV. TIME CLOCK

NOTE: 1. ALL 24 VOLT CONTROL WIRING BY MECHANICAL.
2. ACTUAL UNIT OPENINGS VARY BY MAKE AND MODEL.
3. CONFIRM ALL VOLTAGES WITH EQUIPMENT SCHEDULES.

HEAT RECOVERY UNIT HRV-1 CONTROL

N.T.S.

5 / M-4

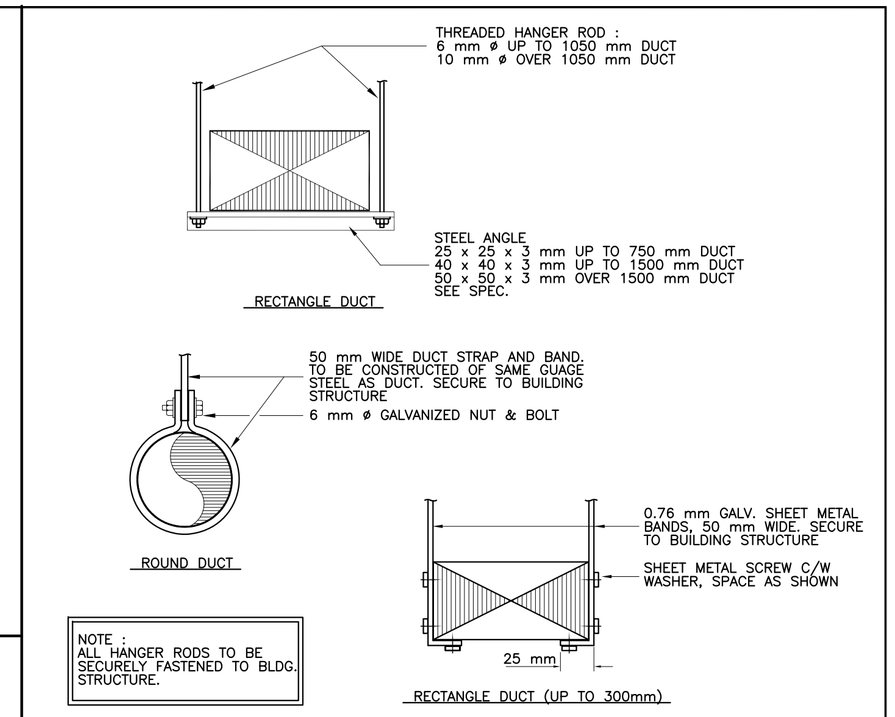

TYPICAL DUCT SUPPORT DETAIL

N.T.S.

1 / M-4

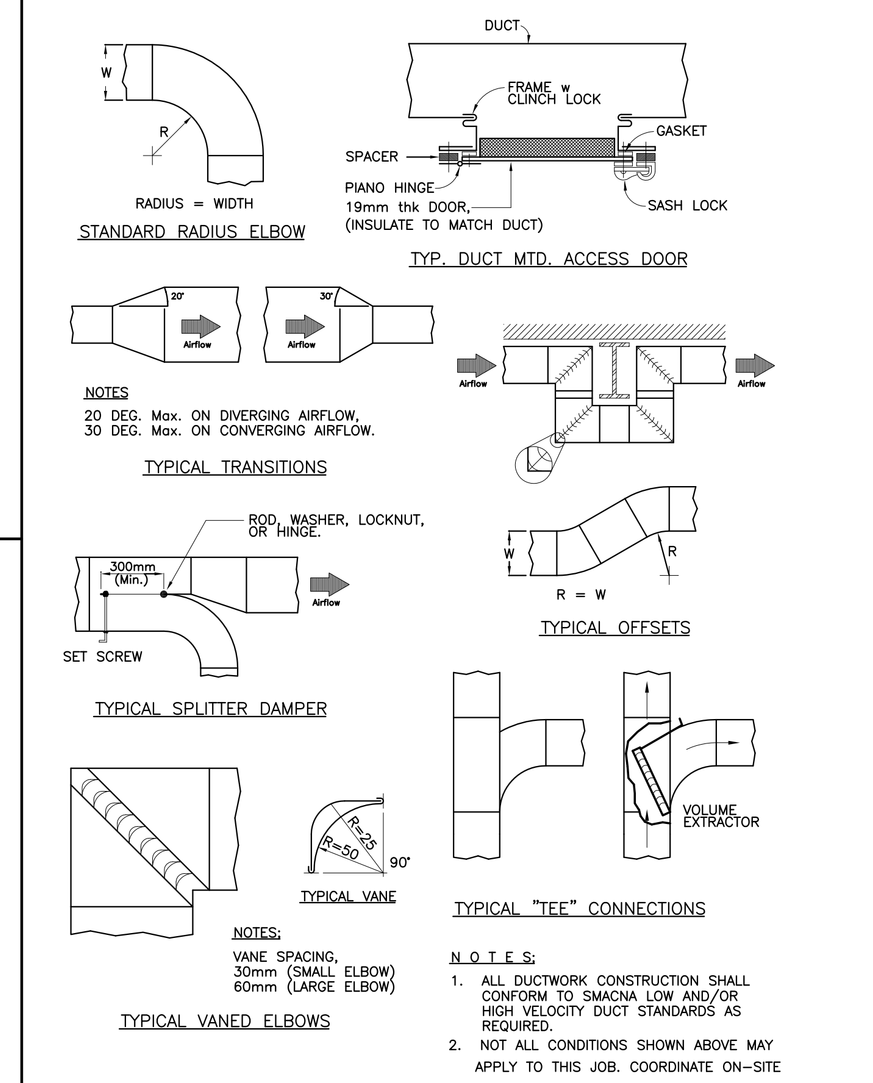

TYPICAL DUCT CONSTRUCTION STANDARDS

N.T.S.

2 / M-4

PERMIT	STAMP	SUB CONSULTANT	SUB CONSULTANT			PRIME / MECHANICAL / ELECTRICAL CONSULTANTS	CLIENT	PROJECT TITLE	DRAWING TITLE	DRAWING No.
PROVINCE OF NEWFOUNDLAND AND LABRADOR PEGL Newfoundland and Labrador PERMIT HOLDER This Permit Allows ROWSELL APPLEBY NEWTON ENGINEERING INC. To practice Professional Engineering in Newfoundland and Labrador. Permit No. as issued by APEGN P0255 which is valid for the year 2016.				DRAWN: SP DESIGNED: CR CHECKED: CR APPROVED: CR SCALE: AS INDICATED PROJECT No.: 16-026	A ISSUED FOR REVIEW SP 16/04/11 No. Description By yy/mm/dd	R|A|N ROWSELL APPLEBY NEWTON ENGINEERING INC 1 Centennial Street Suite 101 Mount Pearl, NL T 709.754.9135		TOWN OF PORTUGAL COVE - ST. PHILIP'S PUBLIC WORKS DEPOT	MECHANICAL DETAILS	M-4 SHEET No. –

FAN SCHEDULE										
Tag	Manufacturer	Model	Airflow	Static Pressure	RPM	Motor Power	Voltage	Phase	Frequency	Comments
EF-1	GREENHECK	CWB-300-20	3300 L/s	250 Pa	660	1492 W	230 V	1	60 Hz	C/W DISCONNECT SWITCH AND BACKDRAFT DAMPER
EF-2	SOURCETEC	DS-11	850 L/s	995 Pa	3500	2238 W	230 V	1	60 Hz	C/W CONTROL PANEL, DISCONNECTS SWITCH AND STARTER, MOUNTING BRACKET AND SILENCER

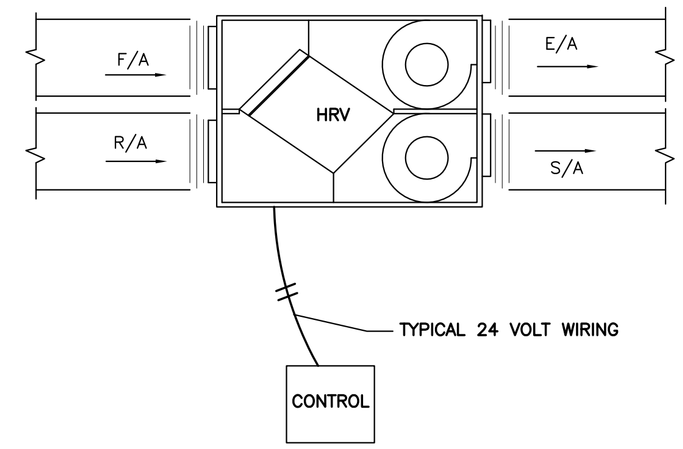

SEQUENCE: 1. CONTINUOUS OPERATION

NOTE: 1. ALL 24 VOLT CONTROL WIRING BY MECHANICAL.
2. ACTUAL UNIT OPENINGS VARY BY MAKE AND MODEL.
3. CONFIRM ALL VOLTAGES WITH EQUIPMENT SCHEDULES.

HEAT RECOVERY UNIT HRV-2 CONTROL

N.T.S.

4 / M-5

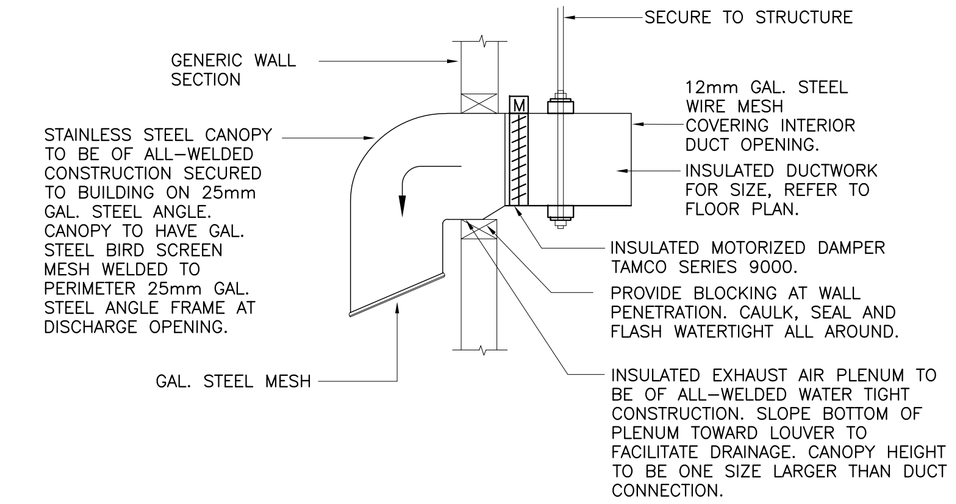

TYPICAL WALL MOUNTED HOOD DETAIL

N.T.S.

1 / M-5

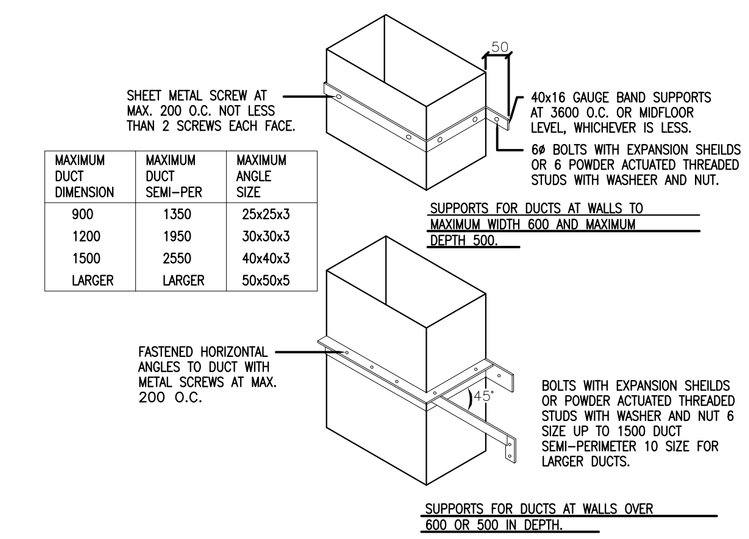

MAXIMUM DUCT DIMENSION	MAXIMUM DUCT SEMI-PER	MAXIMUM ANGLE SIZE
900	1350	25x25x3
1200	1950	30x30x3
1500	2550	40x40x3
LARGER	LARGER	50x50x5

VERTICAL DUCT SUPPORTS

N.T.S.

2 / M-5

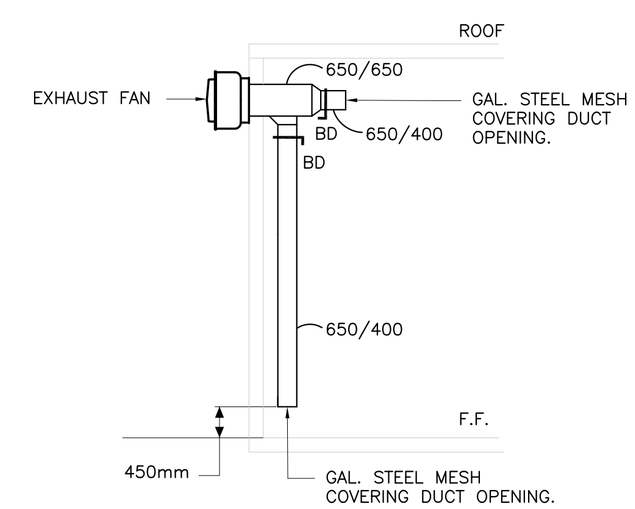

DUCT DROP DOWN BY WALL IN SERVICE AREA

N.T.S.

3 / M-5

PERMIT
PROVINCE OF NEWFOUNDLAND AND LABRADOR
PEGNL Newfoundland and Labrador PROFESSIONAL ENGINEERS OF NEWFOUNDLAND
PERMIT HOLDER This Permit Allows
ROWSELL APPLEBY NEWTON ENGINEERING INC.
To practice Professional Engineering in Newfoundland and Labrador. Permit No. as issued by APEGN P0255 which is valid for the year 2016.

STAMP

SUB CONSULTANT

SUB CONSULTANT

DRAWN	SP
DESIGNED	CR
CHECKED	CR
APPROVED	CR
SCALE	AS INDICATED
PROJECT No.	16-026

No.	Description	By	yy/mm/dd
A	ISSUED FOR REVIEW	SP	16/04/11

PRIME / MECHANICAL / ELECTRICAL CONSULTANTS
RAN
ROWSELL APPLEBY NEWTON ENGINEERING INC
1 Centennial Street Suite 101 Mount Pearl, NL
T 709.754.9135

CLIENT

PROJECT TITLE
TOWN OF PORTUGAL COVE - ST. PHILIP'S PUBLIC WORKS DEPOT

DRAWING TITLE
MECHANICAL DETAILS

DRAWING No.
M-5

SHEET No.
–